United Delco

Delco Rochester

MODEL 4GC CARBURETORS

1955-1956 BUICK V-8

SERIES 50, 60, 70

BULLETIN 9C-100
DATE: AUGUST, 1964
PAGE 1
REPLACES ALL PAGES OF 9C-100, 4-15-57

FOR SPECIFICATIONS SEE BULLETIN 9 BU-1, FOR ADJUSTMENTS SEE BULLETIN 9 BU-4

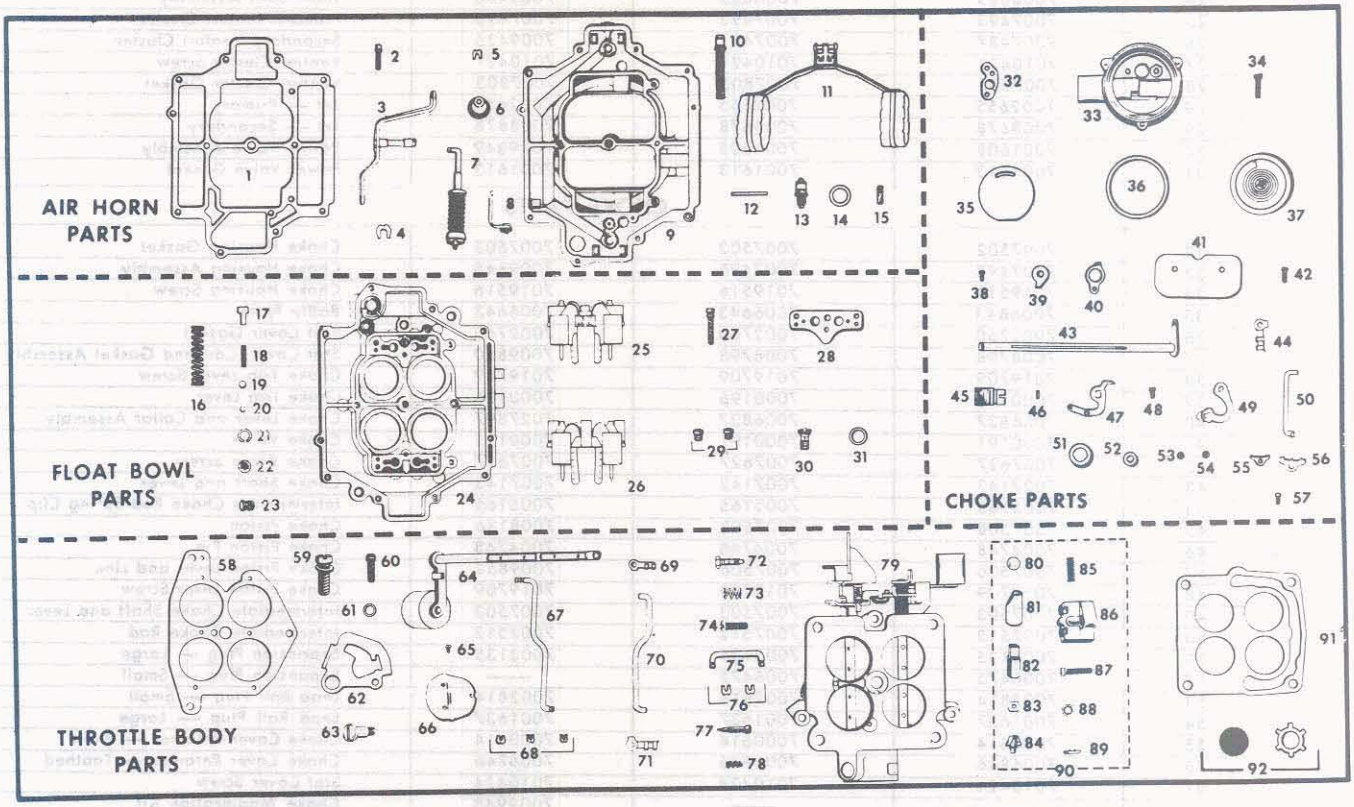

PARTS SHOWN ARE FOR IDENTIFICATION ONLY. CONSULT PARTS LIST FOR CORRECT PART NAME AND NUMBER

	1955 EARLY	1955 LATE	1956	YEAR
	7006200	**7009100**	**7009200**	**CARBURETOR No.**
	24-100	**24-100**	**24-100**	**REPLACEMENT PACKAGE No.**
	7009555	709555	7009923	OVERHAUL KIT
	VFR-100	VFR-100	VFR-101	OK KIT
	40-215	40-215	40-215	GASKET SET
		AIR HORN PARTS		
Illus. No.				
1	7006061	7006061	7006061	Air Horn Gasket
2	7000249	7000249	7000249	Air Horn Screw
3	7007625	7007625	7007625	Pump Shaft and Lever Assembly
4	7007616	7007616	7007616	Pump Lever Clip
5	7005032	7005032	7005032	Pump Plunger Clip
6	7006372	7006372	7006372	Pump Boot
7	7008691	7008691	7009279	Pump Assembly
8	7016762	7016762	7016762	Starter Switch Lead Bracket
9	7008799	7008799	7009447	Air Horn Assembly
10	7000204	7000204	7000204	Power Piston Assembly
11	7017488	7017488	7017488	Float Assembly
12	7001595	7001595	7001595	Float Hinge Pin
13	30-7	30-7	30-7	Needle and Seat Assembly
14	7019535	7019535	7019535	Needle Seat Gasket
15	7006079	7006079	7006079	Needle Seat Strainer
		FLOAT BOWL PARTS		
16	7008694	7008694	7008694	Pump Return Spring
17	7003838	7003838	7003838	Pump Discharge Guide
18	7002118	7002118	7002118	Pump Discharge Spring
19	7002117	7002117	7002117	Pump Discharge Ball
20	7002120	7002120	7002120	Pump Inlet Ball
21	7001605	7001605	7001605	Pump Inlet Screen Retainer

© 1964 GENERAL MOTORS CORP.

Illus. No.	1955 EARLY 7006200	1955 LATE 7009100	1956 7009200	YEAR CARBURETOR No.
		FLOAT BOWL PARTS (Continued)		
22	7001604	7001604	7001604	Pump Inlet Screen
23	7005286	7005286	7005286	Sight Plug
24	7008825	7008825	7009448	Float Bowl Assembly
25	7007493	7007493	7007493	Primary Venturi Cluster
26	7007487	7007487	7009425	Secondary Venturi Cluster
27	7010421	7010421	7010421	Venturi Cluster Screw
28	7007803	7007803	7007803	Venturi Cluster Gasket
29	7002655	7002655	7002655	Jet — Primary
29	7008678	7008678	7008678	Jet — Secondary
30	7001608	7001608	7009349	Power Valve Assembly
31	7001613	7001613	7001613	Power Valve Gasket
		CHOKE PARTS		
32	7007502	7007502	7007502	Choke Housing Gasket
33	7007498	7007498	7009845	Choke Housing Assembly
34	7019516	7019516	7019516	Choke Housing Screw
35	7006643	7006643	7006643	Baffle Plate
36	7002760	7002760	7002760	Stat Cover Gasket
37	7008798	7008798	7009850	Stat Cover, Coil and Gasket Assembly
38	7019709	7019709	7019709	Choke Trip Lever Screw
39	7000196	7000196	7000196	Choke Trip Lever
40	7006837	7006837	7027897	Choke Lever and Collar Assembly
41	7000191	7000191	7000191	Choke Valve
42	7007627	7007627	7007627	Choke Valve Screw
43	7007143	7007143	7007143	Choke Shaft and Lever
44	7005165	7005165	7005165	Intermediate Choke Rod Spring Clip
45	7007508	7007508	7008186	Choke Piston
46	7004748	7004748	7004748	Choke Piston Pin
47	7007506	7007506	7009852	Choke Piston Lever and Link
48	7019709	7019709	7019709	Choke Piston Lever Screw
49	7007503	7007503	7007503	Intermediate Choke Shaft and Lever
50	7007512	7007512	7007512	Intermediate Choke Rod
51	7003135	7003135	7003135	Expansion Plug — Large
52	7006475	7006475	——	Expansion Plug — Small
53	7002814	7002814	7002814	Lead Ball Plug — Small
54	7001637	7001637	7001637	Lead Ball Plug — Large
55	7000614	7000614	7000614	Choke Cover Retainer — Plain
56	7006846	7006846	7006846	Choke Cover Retainer — Toothed
57	7010424	7010424	7010424	Stat Cover Screw
	——	——	7009948	Choke Modification Kit
		THROTTLE BODY PARTS		
58	7024525	7024525	7024525	Throttle Body Gasket
59	7004324	7004324	7004324	Throttle Body Screw (Large)
60	7015105	7015105	7015105	Throttle Body Screw (Small)
61	121744	121744	121744	Lockwasher — Throttle Body Screw (Small)
62	7007091	7007091	7009274	Fast Idle Cam
63	7007094	7007094	7007094	Cam Attaching Screw
64	7007085	7007085	7009272	Damper Shaft and Lever Assembly
65	7007090	7007090	7007090	Damper Valve Attaching Screw
66	7007089	7007089	7007089	Damper Valve
67	7007113	7007113	7007113	Choke Rod
68	7005032	7005032	7005032	Choke Rod Clip
69	7003137	7003137	7003137	Pump Rod Spring Clip — Upper
70	7007112	7007112	7007112	Pump Rod
71	7003242	7003242	7003242	Pump Rod Spring Clip — Lower
72	7003122	7003122	7003122	Fast Idle Screw
73	7003176	7003176	7003176	Fast Idle and Idle Stop Screw Spring
74	7003175	7003175	7003175	Idle Stop Screw
75	7007110	7007110	7007110	Secondary Lever Link
76	7005032	7005032	7005032	Secondary Lever Link Clip
77	7004402	7004402	7004402	Idle Needle
78	7003190	7003190	7003190	Idle Needle Spring
79	7008593	7008593	7009449	Throttle Body Assembly
80	1875366	1875366	1875366	Starter Switch Ball
81	1332544	1332544	1332544	Starter Switch Plunger
82	1332614	1332614	1332614	Starter Switch Guide Block
83	1875287	1875287	1875287	Contact Spring Shim — .006"
	1875360	1875360	1875360	Contact Spring Shim — .018"
84	1338004	1338004	1338004	Contact Spring Assembly
85	1341647	1341647	1341647	Starter Switch Spring
86	1346587	1346587	1346587	Terminal Cap Assembly
87	186797	186797	186797	Terminal Cap Attaching Screw
88	138530	138530	138530	Terminal Cap Screw Lockwasher
89	1339494	1339494	1339494	Starter Switch Strainer
90	7011371	7011371	7011371	Starter Switch Kit
91	1170643	1170643	1170643	Flange Gasket
92	——	7009451	7009451	Screw Protecting Cap and Retainer Assembly

United Delco

Delco Rochester

MODEL 4GC CARBURETORS

1957-1958 BUICK V-8

SERIES 50, 60, 70, 700

BULLETIN 9C-101
DATE: AUGUST, 1964
PAGE 1
REPLACES ALL PAGES OF
9C-102, AUG., 1958
9C-103, MAY, 1960

FOR SPECIFICATIONS SEE BULLETIN 9 BU-1, FOR ADJUSTMENTS SEE BULLETIN 9 BU-4

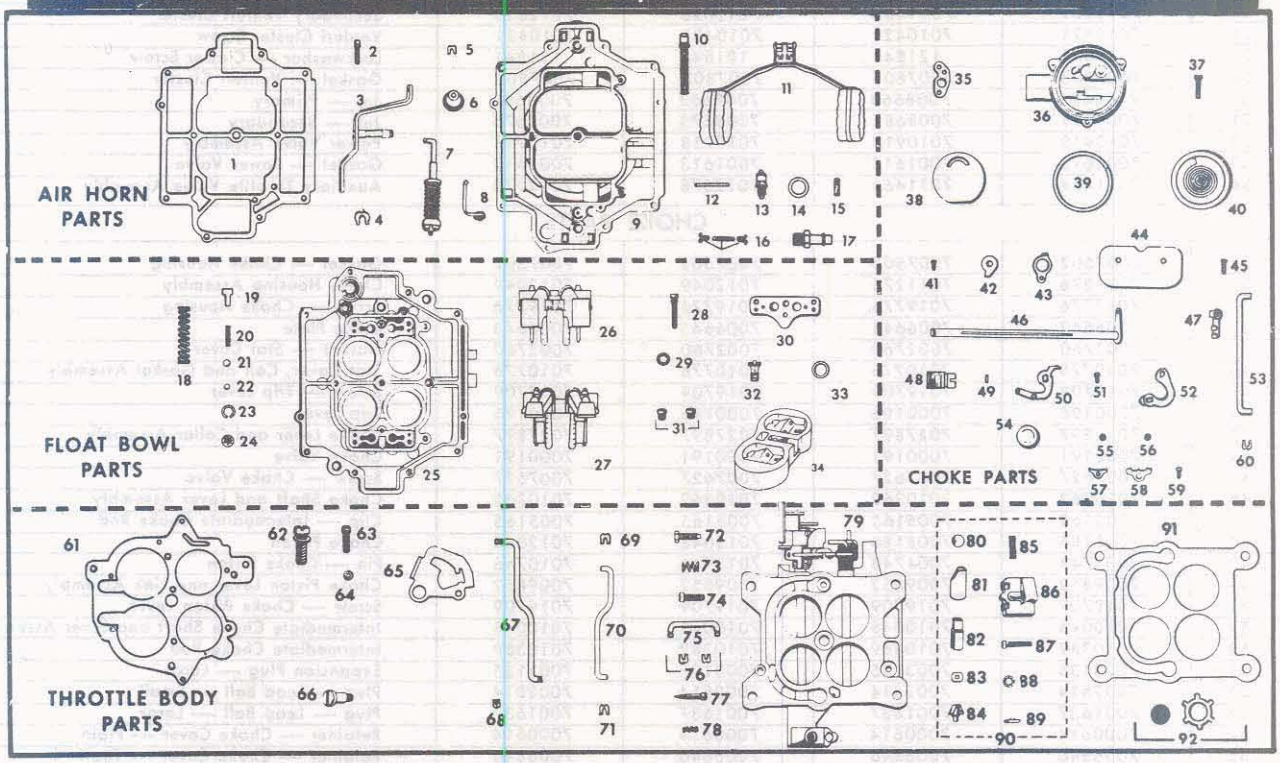

PARTS SHOWN ARE FOR IDENTIFICATION ONLY. CONSULT PARTS LIST FOR CORRECT PART NAME AND NUMBER

	1957 (Early)	1957 (Late)	1958 (Early)	1958 (Late)	YEAR
	7010070	**7011570**	**7011600**	**7013100**	**CARBURETOR No.**
	24-101	**24-101**	**24-102**	**24-102**	**REPLACEMENT PACKAGE No.**
	7015820	7015820	7015820	7015860	OVERHAUL KIT
	VFR-102	VFR-102	VFR-102	VFR-103	OK KIT
	40-234	40-234	40-234	40-234	GASKET SET
Illus. No.			AIR HORN PARTS		
1	7006061	7006061	7006061	7006061	Air Horn Gasket
2	7000249	7000249	7000249	7000249	Air Horn Screw
3	7011944	7011944	7011944	7011944	Pump Shaft and Lever Assembly
4	7007616	7007616	7007616	7007616	Pump Lever Clip
5	7005032	7005032	7005032	7005032	Pump Plunger Clip
6	7006372	7006372	7006372	7006372	Pump Boot
7	7012417	7012417	7012417	7012417	Pump Assembly
8	7016762	7016762	7016762	7016762	Starter Switch Lead Bracket
9	7010775	7010775	7010775	7010775	Air Horn Assembly
10	7010332	7010332	7012080	7012080	Power Piston Assembly
11	7010064	7010064	7012148	7012148	Float Assembly
12	7001595	7001595	7001595	7001595	Float Hinge Pin
13	30-7	30-7	30-7	30-11	Needle and Seat Assembly — Primary
13	30-7	30-7	30-7	30-7	Needle and Seat Assembly — Secondary
14	7019535	7019535	7019535	7019535	Gasket — Needle Seat
15	7006079	7006079	7006079	7006079	Strainer — Needle Seat
16	7001850	7001850	7001850	7001850	Float Balance Spring and Clips Assembly
17	5620839	5620839	5620839	5620839	Nipple — Fuel Inlet
			FLOAT BOWL PARTS		
18	7008694	7008694	7008694	7008694	Pump Return Spring
19	7003838	7003838	7003838	7003838	Pump Discharge Guide
20	7002118	7002118	7002118	7002118	Pump Discharge Spring
21	7002117	7002117	7002117	7002117	Pump Discharge Ball
22	7002120	7002120	7002120	7002120	Pump Inlet Ball
23	7001605	7001605	7001605	7001605	Pump Inlet Screen Retainer
24	7001604	7001604	7001604	7001604	Pump Inlet Screen
25	7012181	7012181	7012181	7012181	Float Bowl Assembly

© 1964 GENERAL MOTORS CORP.

	1957 (Early)	1957 (Late)	1958 (Early)	1958 (Late)	YEAR
	7010070	**7011570**	**7011600**	**7013100**	**CARBURETOR No.**
Illus. No.			FLOAT BOWL PARTS (Continued)		
26	7010364	7010364	7012443	7013134	Primary Venturi Cluster
27	7011469	7011469	7012020	7012020	Secondary Venturi Cluster
28	7010421	7010421	7010421	7010421	Venturi Cluster Screw
29	121841	121841	121841	121841	Lockwasher — Cluster Screw
30	7007803	7007803	7007803	7007803	Gasket — Venturi Cluster
31	7008663	7008663	7008663	7008662	Jet — Primary
31	7008681	7008681	7008675	7008675	Jet — Secondary
32	7010918	7010918	7010918	7010918	Power Valve Assembly
33	7001613	7001613	7001613	7001613	Gasket — Power Valve
34	7011464	7011464	7012578	7012578	Auxiliary Throttle Valve Assembly
			CHOKE PARTS		
35	7007502	7007502	7007502	7007502	Gasket — Choke Housing
36	7011276	7011276	7012049	7012049	Choke Housing Assembly
37	7019776	7019776	7019776	7019776	Screw — Choke Housing
38	7006643	7006643	7006643	7006643	Baffle Plate
39	7002760	7002760	7002760	7002760	Gasket — Stat Cover
40	7010778	7010778	7010778	7010778	Stat Cover, Coil and Gasket Assembly
41	7019709	7019709	7019709	7019709	Screw — Trip Lever
42	7000196	7000196	7000196	7000196	Trip Lever
43	7027897	7027897	7027897	7027897	Choke Lever and Collar Assembly
44	7000191	7000191	7000191	7000191	Choke Valve
45	7007627	7007627	7007627	7007627	Screw — Choke Valve
46	7010362	7010362	7010362	7010362	Choke Shaft and Lever Assembly
47	7005165	7005165	7005165	7005165	Clip — Intermediate Choke Rod
48	7008186	7008186	7012048	7012048	Choke Piston
49	7004748	7004748	7010746	7010746	Pin — Choke Piston
50	7009852	7009852	7009852	7009852	Choke Piston Lever and Link Assembly
51	7019709	7019709	7019709	7019709	Screw — Choke Piston Lever
52	7010048	7010048	7010048	7010048	Intermediate Choke Shaft and Lever Assembly
53	7010389	7010389	7010389	7010389	Intermediate Choke Rod
54	7003135	7003135	7003135	7003135	Expansion Plug — Large
55	7002814	7002814	7002814	7002814	Plug — Lead Ball — Small
56	7001637	7001637	7001637	7001637	Plug — Lead Ball — Large
57	7000614	7000614	7000614	7000614	Retainer — Choke Cover — Plain
58	7006846	7006846	7006846	7006846	Retainer — Choke Cover — Toothed
59	7010424	7010424	7010424	7010424	Screw — Choke Cover
60	7005109	7005109	7005109	7005109	Clip — Intermediate Choke Rod
			THROTTLE BODY PARTS		
61	7013471	7013471	7013471	7013471	Gasket — Throttle Body
62	7004324	7004324	7004324	7004324	Screw — Throttle Body — Large
63	7015105	7015105	7015105	7015105	Screw — Throttle Body — Small
64	121744	121744	121744	121744	Lockwasher — Throttle Body Screw (Small)
65	7010384	7010384	7010384	7010384	Cam — Fast Idle
66	7007094	7007094	7007094	7007094	Screw — Cam Attaching
67	7010391	7010391	7010391	7010391	Choke Rod
68	7005032	7005032	7005032	7005032	Clip — Choke Rod
69	7005032	7005032	7005032	7005032	Clip — Pump Rod
70	7011475	7011475	7011475	7011475	Pump Rod
71	7005032	7005032	7005032	7005032	Clip — Pump Rod
72	7011546	7011546	7011546	7011546	Fast Idle Screw
73	7003176	7003176	7003176	7003176	Spring — Fast Idle and Idle Stop Screws
74	7001619	7001619	7001619	7001619	Idle Stop Screw
75	7010383	7010383	7010383	7010383	Link — Secondary Lever
76	7005032	7005032	7005032	7005032	Clip — Secondary Lever Link
77	7004402	7004402	7004402	7004402	Idle Needle
78	7003190	7003190	7003190	7003190	Spring — Idle Needle
79	7010777	7010777	7012182	7013169	Throttle Body Assembly
80	1875366	1875366	1875366	1875366	Ball — Starter Switch
81	1332544	1332544	1332544	1332544	Plunger — Starter Switch
82	1332614	1332614	1332614	1332614	Guide Block — Starter Switch
83	1875287	1875287	1875287	1875287	Shim — Contact Spring — .006"
	1875360	1875360	1875360	1875360	Shim — Contact Spring — .018"
84	1338004	1338004	1338004	1338004	Contact Spring Assembly
85	1341647	1341647	1341647	1341647	Spring — Starter Switch
86	7010519	7010519	7010519	7010519	Terminal Cap Assembly
87	7010433	7010433	7010433	7010433	Screw — Terminal Cap
88	138530	138530	138530	138530	Lockwasher — Terminal Cap Screw
89	1339494	1339494	1339494	1339494	Strainer — Starter Switch
90	7011372	7011372	7011372	7011372	Starter Switch Kit
91	1353378	1353378	1353378	1353378	Flange Gasket
92	7009451	7009451	7009451	7009451	Screw Protecting Cap and Retainer Assembly

United Delco

Delco Rochester
MODEL 4GC CARBURETORS
1959-1962 BUICK

BULLETIN 9C-102
DATE: AUGUST, 1964
PAGE 1
REPLACES ALL PAGES OF 9C-104, OCT., 1961

FOR SPECIFICATIONS SEE BULLETIN 9 BU-1, FOR ADJUSTMENTS SEE BULLETIN 9 BU-4

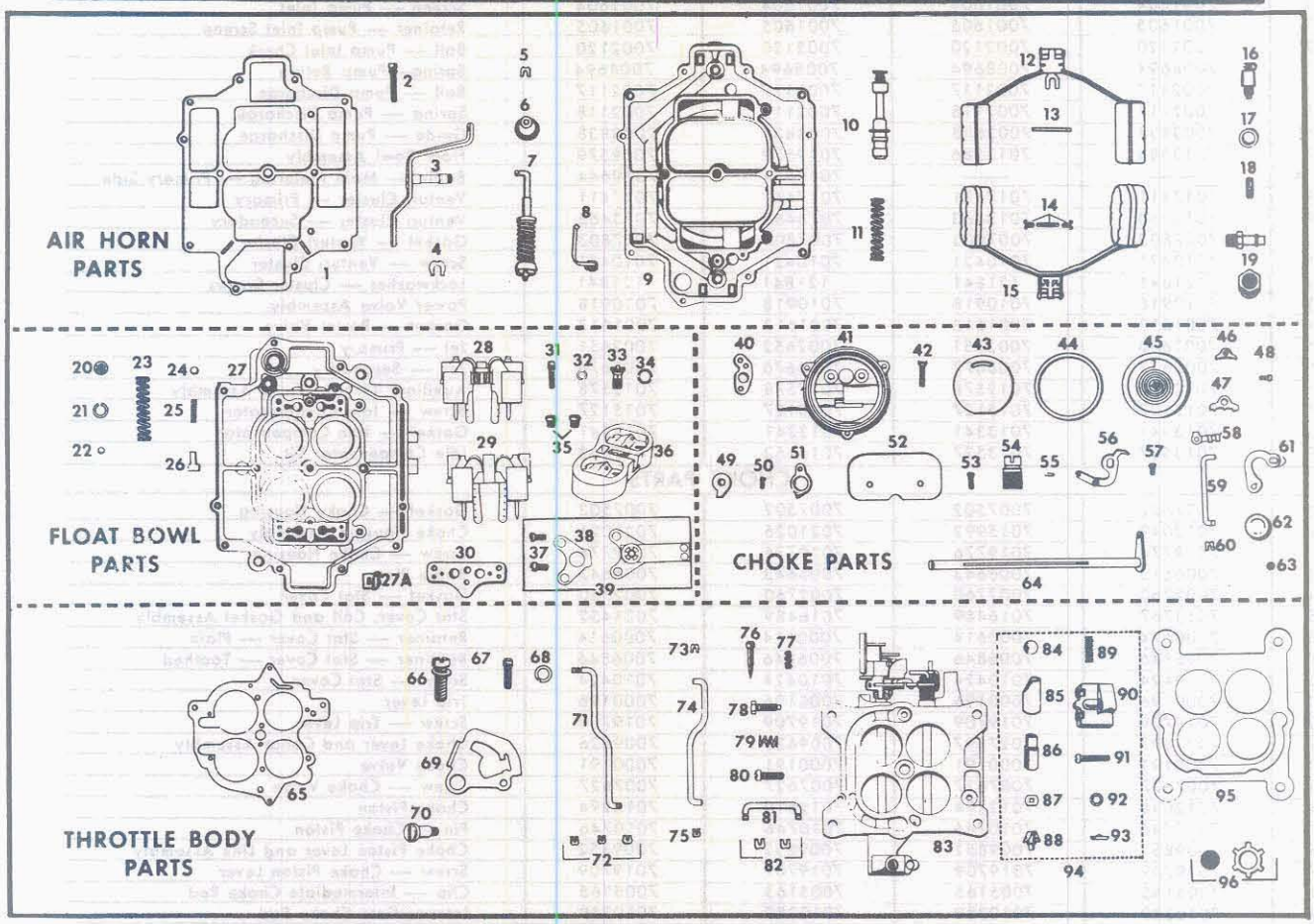

PARTS SHOWN ARE FOR IDENTIFICATION ONLY. CONSULT PARTS LIST FOR CORRECT PART NAME AND NUMBER

	1959	1960	1961	1962	YEAR
	7013044	**7015040**	**7019040**	**7020040**	**CARBURETOR No. (Standard)**
	—	—	—	**7020041**	**CARB. No. (Crankcase Vent)**
	24-103	**24-103**	**24-104A**	**24-104A**	**REPLACEMENT PACKAGE No.**
	7016442	7016442	7016442	7016442	OVERHAUL KIT
	VFR-104	VFR-104	VFR-104	VFR-104	OK KIT
	40-235	40-235	40-235	40-235	GASKET SET
	7016013	7016013	7016013	7016013	ALTITUDE KIT
Illus. No.			AIR HORN PARTS		
1	7015136	7015136	7015136	7015136	Gasket — Air Horn
2	7000249	7000249	7000249	7000249	Screw — Air Horn
3	7013143	7013143	7013143	7013143	Pump Shaft and Lever Assembly
4	7007616	7007616	7007616	7007616	Clip — Pump Lever
5	7005032	7005032	7005032	7005032	Clip — Pump Plunger
6	7006372	7006372	7006372	7006372	Boot — Pump Plunger
7	7012417	7012417	7012417	7012417	Pump Assembly
8	7016762	7016762	—	—	Bracket — Starter Switch Lead
9	7013585	7013585	7013585	7021431	Air Horn Assembly
10	7016575	7017406	7017406	7017406	Power Piston Assembly
11	7011957	—	—	—	Spring — Power Piston
12	7011945	7016674	7016674	7016674	Float Assembly — Primary
13	7001595	7001595	7001595	7001595	Pin — Float Hinge
14	7001850	7001850	7001850	7001850	Float Balance Spring and Clips
15	7012148	7012148	7012148	7012148	Float Assembly — Secondary
16	30-11	30-11	30-11	30-11	Needle and Seat Assembly — Primary
16	30-7	30-7	30-7	30-7	Needle and Seat Assembly — Secondary
17	7019535	7019535	7019535	7019535	Gasket — Needle Seats
18	7006079	7006079	7006079	7006079	Strainer — Needle Seats
19	5620839	5620839	145475	145475	Fitting — Fuel Inlet

© 1964 GENERAL MOTORS CORP.

Illus. No.	1959	1960	1961	1962	YEAR
	7013044	7015040	7019040	7020040	CARBURETOR No. (Standard)
	——	——	——	7020041	CARB. No. (Crankcase Vent)
			FLOAT BOWL PARTS		
20	7001604	7001604	7001604	7001604	Screen — Pump Inlet
21	7001605	7001605	7001605	7001605	Retainer — Pump Inlet Screen
22	7002120	7002120	7002120	7002120	Ball — Pump Inlet Check
23	7008694	7008694	7008694	7008694	Spring—Pump Return
24	7002117	7002117	7002117	7002117	Ball — Pump Discharge
25	7002118	7002118	7002118	7002118	Spring — Pump Discharge
26	7003838	7003838	7003838	7003838	Guide — Pump Discharge
27	7013586	7013586	7019579	7019579	Float Bowl Assembly
27A	——	——	7019644	7019644	Baffle — Main Metering — Primary Side
28	7017411	7017411	7017411	7017411	Venturi Cluster — Primary
29	7013463	7013463	7013463	7013463	Venturi Cluster — Secondary
30	7007803	7007803	7007803	7007803	Gasket — Venturi Cluster
31	7010421	7010421	7010421	7010421	Screw — Venturi Cluster
32	121841	121841	121841	121841	Lockwasher — Cluster Screws
33	7010918	7010918	7010918	7010918	Power Valve Assembly
34	7001613	7001613	7001613	7001613	Gasket — Power Valve
35	7002650	7002651	7002652	7002651	Jet — Primary
35	7008677	7008677	7008676	7008676	Jet — Secondary
36	7012578	7012578	7012578	7012578	Auxiliary Throttle Valve Assembly
37	7015127	7015127	7015127	7015127	Screw — Idle Compensator
38	7013341	7013341	7013341	7013341	Gasket — Idle Compensator
39	7013527	7013527	7015163	7015163	Idle Compensator Kit
			CHOKE PARTS		
40	7007502	7007502	7007502	7007502	Gasket — Choke Housing
41	7012049	7015992	7021026	7021026	Choke Housing Assembly
42	7019776	7019776	7019776	7019776	Screw — Choke Housing
43	7006643	7006643	7006643	7006643	Baffle Plate
44	7002760	7002760	7002760	7002760	Gasket — Stat Cover
45	7013767	7016489	7016489	7021432	Stat Cover, Coil and Gasket Assembly
46	7000614	7000614	7000614	7000614	Retainer — Stat Cover — Plain
47	7006846	7006846	7006846	7006846	Retainer — Stat Cover — Toothed
48	7010424	7010424	7010424	7010424	Screw — Stat Cover
49	7000196	7000196	7000196	7000196	Trip Lever
50	7019709	7019709	7019709	7019709	Screw — Trip Lever
51	7027897	7027897	7009626	7009626	Choke Lever and Collar Assembly
52	7000191	7000191	7000191	7000191	Choke Valve
53	7007627	7007627	7007627	7007627	Screw — Choke Valve
54	7012048	7012294	7012610	7012294	Choke Piston
55	7010746	7010746	7010746	7010746	Pin — Choke Piston
56	7009852	7009852	7009852	7009852	Choke Piston Lever and Link Assembly
57	7019709	7019709	7019709	7019709	Screw — Choke Piston Lever
58	7005165	7005165	7005165	7005165	Clip — Intermediate Choke Rod
59	7010389	7010389	7010389	7010389	Intermediate Choke Rod
60	7005109	7005109	7005109	7005109	Clip — Intermediate Choke Rod
61	7010048	7010048	7010048	7010048	Intermediate Choke Shaft Assembly
62	7003135	7003135	7003135	7003135	Plug Expansion
63	7002814	7002814	7002814	7002814	Plug — Lead Ball
64	7010362	7010362	7010362	7010362	Choke Shaft and Lever Assembly
			THROTTLE BODY PARTS		
65	7013471	7013471	7013471	7013471	Gasket — Throttle Body
66	7004324	7004324	7004324	7004324	Screw — Throttle Body — Large
67	7015105	7015105	7015105	7015105	Screw — Throttle Body — Small
68	121744	121744	121744	121744	Lockwasher — Small Screws
69	7010384	7015990	7019275	7019275	Cam — Fast Idle
70	7007094	7007094	7019773	7019773	Screw — Cam Attaching
71	7010391	7010391	7019276	7019276	Choke Rod
72	7005032	7005032	7005032	7005032	Clip — Choke Rod
73	7005032	7005032	7005032	7005032	Clip — Pump Rod
74	7013140	7013140	7013140	7013140	Pump Rod
75	7005032	7005032	7005032	7005032	Clip — Pump Rod
76	7013470	7013470	7013470	7013470	Idle Needle
77	7011479	7011479	7011479	7011479	Spring — Idle Needle
78	7011546	7011546	7011546	7011546	Screw — Fast Idle
79	7003176	7003176	7001690	7001690	Spring — Fast Idle and Idle Stop Screws
80	7001619	7001619	7001619	7001619	Idle Stop Screw
81	7010383	7010383	7010352	7010352	Link — Secondary Lever
82	7005032	7005032	7005032	7005032	Clip — Secondary Link
83	7013587	7013587	7021433	7021433	Throttle Body Assembly
84	1875366	1875366	——	——	Ball — Starter Switch
85	1332544	1332544	——	——	Plunger — Starter Switch
86	1332614	1332614	——	——	Guide Block — Starter Switch
87	1875287	1875287	——	——	Shim — Contact Spring — .006"
87	1875360	1875360	——	——	Shim — Contact Spring — .018"
88	1338004	1338004	——	——	Contact Spring Assembly
89	1341647	1341647	——	——	Spring — Starter Switch
90	7010519	7010519	——	——	Terminal Cap Assembly
91	7010433	7010433	——	——	Screw — Terminal Cap
92	138530	138530	——	——	Lockwasher — Terminal Cap Screws
93	1339494	1339494	——	——	Strainer — Starter Switch
94	7011372	7011372	——	——	Starter Switch Kit
95	1353378	1353378	1353378	1353378	Flange Gasket
96	7009451	7009451	7009451	7009451	Screw Protecting Cap and Retainer Assembly

United Delco

Delco Rochester

MODEL 2 GC CARBURETORS

1961 BUICK LE SABRE V-8

364 CU. IN. ENGINE

BULLETIN 9C-103
DATE: AUGUST, 1964
PAGE 1
REPLACES ALL PAGES OF
9C-105, OCT., 1960
9C-105A, APRIL, 1961

FOR SPECIFICATIONS SEE BULLETIN 9 BU-1, FOR ADJUSTMENTS SEE BULLETIN 9 BU-3

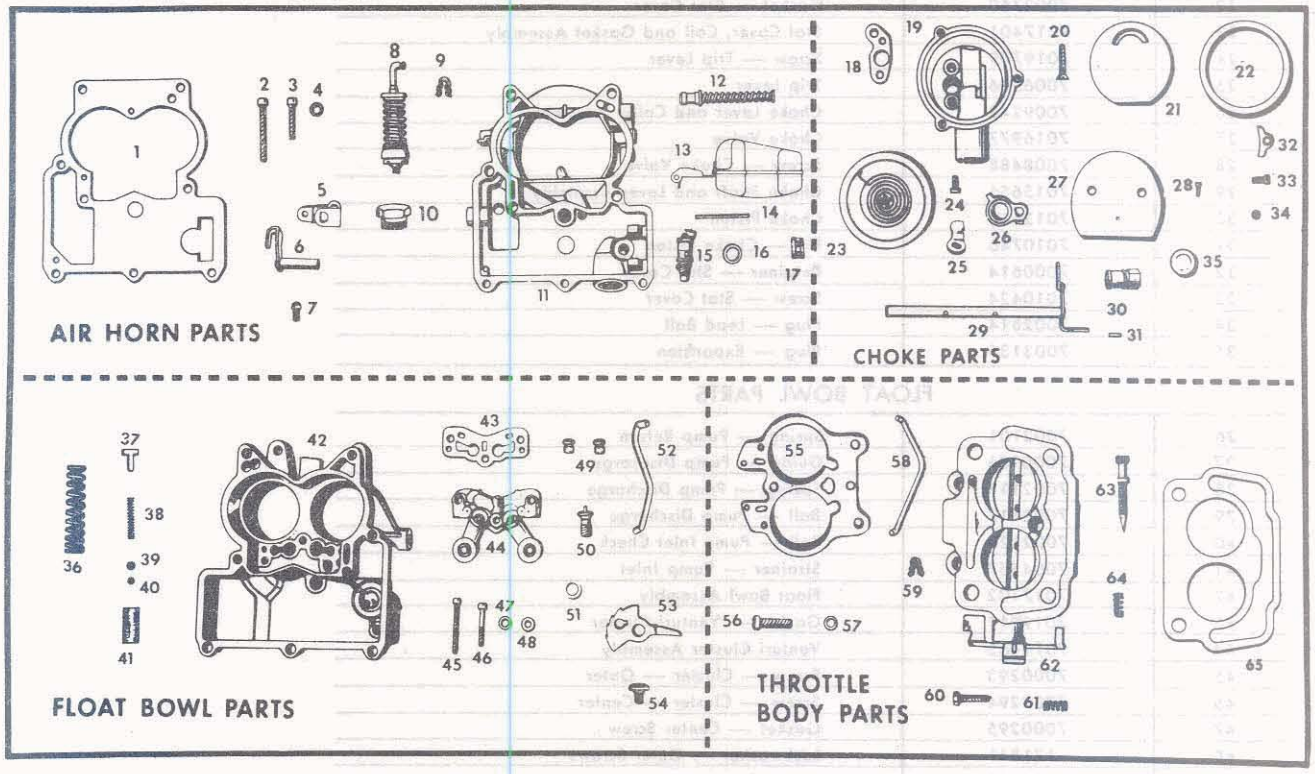

PARTS SHOWN ARE FOR IDENTIFICATION ONLY. CONSULT PARTS LIST FOR CORRECT PART NAME AND NUMBER

7019042	CARBURETOR No.
22-102	REPLACEMENT PACKAGE No.
7016132	OVERHAUL KIT
VTR-100	OK KIT
40-265	GASKET SET

AIR HORN PARTS

Illus. No.		
1	7021008	Gasket — Air Horn
2	7010432	Screw — Air Horn — Long
3	7006119	Screw — Air Horn — Short
4	120217	Lockwasher — Air Horn Screws
5	7000266	Pump Lever — Inside
6	7019511	Pump Shaft and Lever Assembly
7	7010424	Screw — Pump Lever
8	7015871	Pump Assembly
9	1875293	Clip — Pump Plunger
10	145475	Fitting — Fuel Inlet
11	7017400	Air Horn Assembly
12	7012266	Power Piston Assembly
13	7012028	Float Assembly
14	7002081	Pin — Float Hinge
15	30-13	Needle and Seat Assembly
16	7019535	Gasket — Needle Seat
17	7006079	Strainer — Needle Seat

© 1964 GENERAL MOTORS CORP.

Illus. No.	7019042	CARBURETOR No.
		CHOKE PARTS
18	7007502	Gasket — Choke Housing
19	7015891	Choke Housing Assembly
20	7019516	Screw — Choke Housing
21	7010598	Baffle Plate
22	7002760	Gasket — Stat Cover
23	7017401	Stat Cover, Coil and Gasket Assembly
24	7019709	Screw — Trip Lever
25	7006596	Trip Lever
26	7009248	Choke Lever and Collar Assembly
27	7016977	Choke Valve
28	7008488	Screw — Choke Valve
29	7015656	Choke Shaft and Lever Assembly
30	7012610	Choke Piston
31	7010746	Pin — Choke Piston
32	7000614	Retainer — Stat Cover
33	7010424	Screw — Stat Cover
34	7002814	Plug — Lead Ball
35	7003135	Plug — Expansion
		FLOAT BOWL PARTS
36	7002101	Spring — Pump Return
37	7000286	Guide — Pump Discharge
38	7002118	Spring — Pump Discharge
39	7002117	Ball — Pump Discharge
40	7002120	Ball — Pump Inlet Check
41	7004557	Strainer — Pump Inlet
42	7017402	Float Bowl Assembly
43	7019911	Gasket — Venturi Cluster
44	7019463	Venturi Cluster Assembly
45	7000293	Screw — Cluster — Outer
46	7000294	Screw — Cluster — Center
47	7000295	Gasket — Center Screw
48	121841	Lockwasher — Outer Screws
49	7002659	Jet — Standard
50	7010918	Power Valve Assembly
51	7001613	Gasket — Power Valve
52	7025667	Choke Rod
53	7019352	Fast Idle Cam
54	7019773	Screw — Cam Attaching
		THROTTLE BODY PARTS
55	7015148	Gasket — Throttle Body
56	7015105	Screw — Throttle Body
57	121744	Lockwasher — Throttle Body
58	7015676	Pump Rod
59	1875293	Clip — Pump Rod
60	7013347	Fast Idle Screw
61	7001690	Spring — Fast Idle Screw
62	7017403	Throttle Body Assembly
63	7013470	Idle Needle
64	7011479	Spring — Idle Needle
65	1170660	Gasket — Flange

United Delco

Delco Rochester

MODEL 2GC CARBURETORS

1961-63 BUICK "SPECIAL" V-8

215 CU. IN. ENGINE

BULLETIN 9C-104
DATE: AUGUST, 1964
PAGE 1
REPLACES ALL PAGES OF
9C-106, MARCH, 1963
9C-111, MARCH, 1963

FOR SPECIFICATIONS SEE BULLETIN 9 BU-1, FOR ADJUSTMENTS SEE BULLETIN 9 BU-3

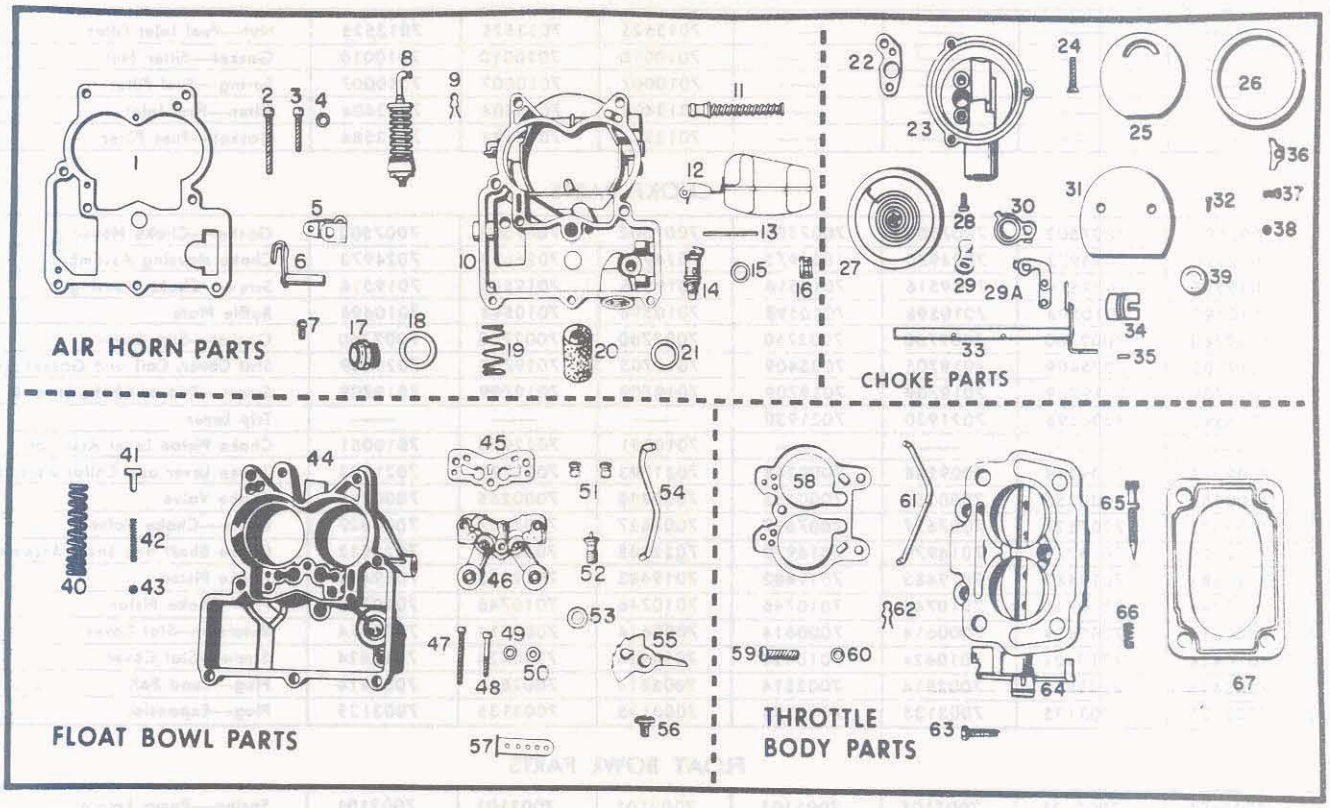

PARTS SHOWN ARE FOR IDENTIFICATION ONLY. CONSULT PARTS LIST FOR CORRECT PART NAME AND NUMBER

	1961 — EARLY 1962		LATE 1962		EARLY '63	LATE '63	1963 ALL	YEAR
	AUTO. TRANS.	SYNCHROMESH	AUTO. TRANS.	SYNCHROMESH	AUTO. TRANS.	AUTO. TRANS.	SYNCHROMESH	APPLICATION
	7019090	**7019093**	**7020146**	**7020147**	**7023046**	**7023142**	**7023047**	**CARBURETOR No.**
	22-100C	**22-101B**	**22-100C**	**22-101B**	**22-100C**	**22-100C**	**22-101B**	**REPLACEMENT PACKAGE No.**
	7016126	7016126	7016256	7016256	7016256	7016256	7016256	OVERHAUL KIT
	VTR-508	VTR-508	VTR-103	VTR-103	VTR-103	VTR-103	VTR-103	OK KIT
	40-258	40-258	40-275	40-275	40-275	40-275	40-275	GASKET SET
	7020091	7020091	7020099	7020099	7028581	7028581	7028581	CARB-AIRATOR
Illus. No.				AIR HORN PARTS				
1	7021008	7021008	7021008	7021008	7021008	7021008	7021008	Gasket—Air Horn
2	7010432	7010432	7010432	7010432	7010432	7010432	7010432	Screw—Air Horn—Long
3	7006119	7006119	7006119	7006119	7006119	7006119	7006119	Screw—Air Horn—Short
4	120217	120217	120217	120217	120217	120217	120217	Lockwasher—Air Horn Screws
5	7000266	7000266	7000266	7000266	7000266	7000266	7000266	Pump Lever—Inside
6	7017506	7017506	7017506	7017506	7017506	7017506	7017506	Pump Shaft and Lever Assembly
7	7010424	7010424	7010424	7010424	7010424	7010424	7010424	Screw—Pump Lever
8	7015871	7015871	7015871	7015871	7015871	7015871	7015871	Pump Assembly
9	1875293	1875293	1875293	1875293	1875293	1875293	1875293	Clip—Pump Plunger
10	7019695	7019695	7019695	7019695	7021974	7021974	7021974	Air Horn Assembly
11	7006323	7006323	7006323	7006323	7006323	7006323	7006323	Power Piston Assembly
12	7012974	7012974	7012974	7012974	7012974	7012974	7012974	Float Assembly
13	7002081	7002081	7002081	7002081	7002081	7002081	7002081	Pin—Float Hinge
14	30-9	30-9	30-9	30-9	30-9	30-9	30-9	Needle and Seat Assembly
15	7019535	7019535	7019535	7019535	7019535	7019535	7019535	Gasket—Needle Seat
16	7006079	7006079	7006079	7006079	7006079	7006079	7006079	Strainer—Needle Seat

© 1964 GENERAL MOTORS CORP

	1961 — EARLY 1962		LATE 1962		EARLY '63	LATE '63	1963 ALL	YEAR
	AUTO. TRANS.	SYNCHROMESH	AUTO. TRANS.	SYNCHROMESH	AUTO. TRANS.	AUTO. TRANS.	SYNCHROMESH	APPLICATION
	7019090	7019093	7020146	7020147	7023046	7023142	7023047	CARBURETOR No.
Illus. No.				AIR HORN PARTS (Continued)				
17	—	—	—	—	7013525	7013525	7013525	Nut—Fuel Inlet Filter
18	—	—	—	—	7010010	7010010	7010010	Gasket—Filter Nut
19	—	—	—	—	7010007	7010007	7010007	Spring—Fuel Filter
20	—	—	—	—	7013404	7013404	7013404	Filter—Fuel Inlet
21	—	—	—	—	7013584	7013584	7013584	Gasket—Fuel Filter
				CHOKE PARTS				
22	7007502	7007502	7007502	7007502	7007502	7007502	7007502	Gasket—Choke Housing
23	7024970	7024973	7024970	7024973	7024970	7026693	7024973	Choke Housing Assembly
24	7019516	7019516	7019516	7019516	7019516	7019516	7019516	Screw—Choke Housing
25	7010598	7010598	7010598	7010598	7010598	7010598	7010598	Baffle Plate
26	7002760	7002760	7002760	7002760	7002760	7002760	7002760	Gasket—Stat Cover
27	7019705	7025409	7019705	7025409	7019705	7019705	7025409	Stat Cover, Coil and Gasket Assembly
28	7019709	7019709	7019709	7019709	7019709	7019709	7019709	Screw—Trip or Choke Lever & Link Assy.
29	7006596	7006596	7021930	7021930	—	—	—	Trip Lever
29A	—	—	—	—	7010051	7022990	7010051	Choke Piston Lever Assembly
30	7009248	7009248	7009248	7009248	7021793	7021793	7021793	Choke Lever and Collar Assembly
31	7000255	7000255	7000255	7000255	7000255	7000255	7000255	Choke Valve
32	7007627	7007627	7007627	7007627	7007627	7007627	7007627	Screw—Choke Valve
33	7016979	7616979	7016979	7016979	7022988	7022988	7022988	Choke Shaft and Lever Assembly
34	7019483	7019483	7019483	7019483	7019483	7019483	7019483	Choke Piston
35	7010746	7010746	7010746	7010746	7010746	7010746	7010746	Pin—Choke Piston
36	7000614	7000614	7000614	7000614	7000614	7000614	7000614	Retainer—Stat Cover
37	7010424	7010424	7010424	7010424	7010424	7010424	7010424	Screw—Stat Cover
38	7002814	7002814	7002814	7002814	7002814	7002814	7002814	Plug—Lead Ball
39	7003135	7003135	7003135	7003135	7003135	7003135	7003135	Plug—Expansion
				FLOAT BOWL PARTS				
40	7002101	7002101	7002101	7002101	7002101	7002101	7002101	Spring—Pump Return
41	7000286	7000286	7000286	7000286	7000286	7000286	7000286	Guide—Pump Discharge
42	7002118	7002118	7002118	7002118	7002118	7002118	7002118	Spring—Pump Discharge
43	7002117	7002117	7002117	7002117	7002117	7002117	7002117	Ball—Pump Discharge
44	7019717	7019698	7021934	7021935	7021934	7026847	7021935	Float Bowl Assembly
45	7019911	7019911	7019911	7019911	7019911	7019911	7019911	Gasket—Venturi Cluster
46	7019718	7019575	7019718	7019575	7025752	7026691	7025700	Venturi Cluster Assembly
47	7000293	7000293	7000293	7000293	7000293	7000293	7000293	Screw—Cluster—Outer
48	7000294	7000294	7000294	7000294	7000294	7000294	7000294	Screw—Cluster—Center
49	7000295	7000295	7000295	7000295	7000295	7000295	7000295	Gasket—Center Screw
50	121841	121841	121841	121841	121841	121841	121841	Lockwasher—Outer Screws
51	7002946	7002948	7002946	7002948	7002946	7002947	7002948	Jet—Standard
51	7002945	7002946	7002945	7002946	7002945	7002946	7002947	Jet—Altitude
52	7006331	7006331	7006331	7006331	7006331	7006331	7006331	Power Valve Assembly
53	7001613	7001613	7001613	7001613	7001613	7001613	7001613	Gasket—Power Valve
54	7017519	7017519	7017519	7017519	7017519	7017519	7017519	Choke Rod
55	7017771	7017783	7017771	7017783	7017771	7026695	7017783	Fast Idle Cam
56	7019773	7019773	7019773	7019773	7019773	7019773	7019773	Screw—Cam Attaching
57	7021528	7021528	7021528	7021528	7021528	7021528	7021528	Insert—Main Well
				THROTTLE BODY PARTS				
58	7017517	7017517	7021933	7021933	7021933	7021933	7021933	Gasket—Throttle Body
59	7015105	7015105	7015105	7015105	7015105	7015105	7015105	Screw—Throttle Body
60	121744	121744	121744	121744	121744	121744	121744	Lockwasher—Throttle Body Screws
61	7017518	7017518	7017518	7017518	7017518	7017518	7017518	Pump Rod
62	7005032	7005032	7005032	7005032	7005032	7005032	7005032	Clip—Pump Rod
63	7006213	7006213	7006213	7006213	7006213	7006213	7006213	Idle Stop Screw
64	7019700	7019700	7020232	7020232	7020232	7020232	7025932	Throttle Body Assembly
65	7013116	7013116	7013116	7013116	7013116	7013116	7013116	Idle Needle
66	7003190	7003190	7003190	7003190	7003190	7003190	7003190	Spring—Idle Needle
67	1363078	1363078	1363078	1363078	1363078	1363078	1363078	Gasket—Flange

United Delco

Delco Rochester

MODEL 4GC CARBURETORS

1961-1963 BUICK "SPECIAL" V-8

215 CU. IN. ENGINE

BULLETIN 9C-105
DATE: AUGUST, 1964
PAGE 1
REPLACES ALL PAGES OF 9C-107, OCT., 1962

FOR SPECIFICATIONS SEE BULLETIN 9 BU-1, FOR ADJUSTMENTS SEE BULLETIN 9 BU-4

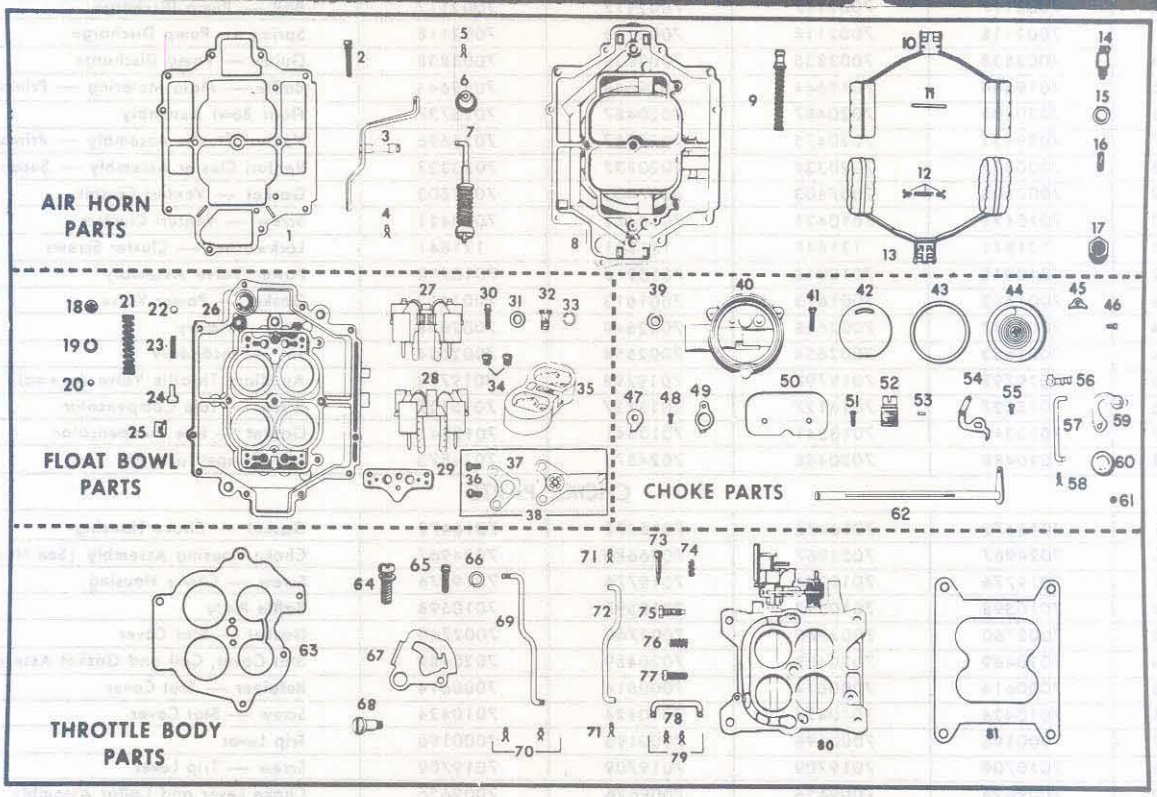

PARTS SHOWN ARE FOR IDENTIFICATION ONLY. CONSULT PARTS LIST FOR CORRECT PART NAME AND NUMBER

	1961-1962		1963		YEAR
	DYNAFLOW	SYNCHROMESH	DYNAFLOW	SYNCHROMESH	APPLICATION
	7020043	**7020045**	**7023044**	**7023045**	**CARBURETOR No.**
	24-105B	**24-106B**	**24-105B**	**24-106B**	**REPLACEMENT PACKAGE No.**
	7016249	7016249	7016249	7016249	OVERHAUL KIT
	VFR-105A	VFR-105A	VFR-105A	VFR-105A	OK KIT
	40-273	40-273	40-273	40-273	GASKET SET
	7022927	7022928	7025902	7025903	ALTITUDE KIT
Illus. No.			AIR HORN PARTS		
1	7015136	7015136	7015136	7015136	Gasket — Air Horn
2	7000249	7000249	7000249	7000249	Screw — Air Horn
3	7020354	7020354	7020354	7020354	Pump Shaft and Lever Assembly
4	7017735	7017735	7017735	7017735	Clip — Pump Lever
5	1875293	1875293	1875293	1875293	Clip — Pump Plunger
6	7006372	7006372	7006372	7006372	Boot — Pump Plunger
7	7020246	7020246	7020246	7020246	Pump Assembly
8	7013585	7013585	7021431	7021431	Air Horn Assembly
9	7020338	7020338	7025738	7025738	Power Piston Assembly
10	7016674	7016674	7016674	7016674	Float Assembly — Primary
11	7001595	7001595	7001595	7001595	Pin — Float Hinge
12	7001850	7001850	7001850	7001850	Float Balance Spring and Clips
13	7012148	7012148	7012148	7012148	Float Assembly — Secondary
14	30-7	30-7	30-7	30-7	Needle and Seat Assembly (2)
15	7019535	7019535	7019535	7019535	Gasket — Needle Seats
16	7006079	7006079	7006079	7006079	Strainer — Needle Seats
17	145475	145475	5620839	5620839	Fitting — Fuel Inlet
			FLOAT BOWL PARTS		
18	7001604	7001604	7001604	7001604	Screen — Pump Inlet
19	7001605	7001605	7001605	7001605	Retainer — Pump Inlet Screen
20	7002120	7002120	7002120	7002120	Ball — Pump Inlet Check
21	7008694	7008694	7008694	7008694	Spring — Pump Return

© 1964 GENERAL MOTORS CORP.

	1961-1962		1963		YEAR
	DYNAFLOW	SYNCHROMESH	DYNAFLOW	SYNCHROMESH	APPLICATION
	7020043	**7020045**	**7023044**	**7023045**	**CARBURETOR No.**
Illus. No.			FLOAT BOWL PARTS (Continued)		
22	7002117	7002117	7002117	7002117	Ball — Pump Discharge
23	7002118	7002118	7002118	7002118	Spring — Pump Discharge
24	7003838	7003838	7003838	7003838	Guide — Pump Discharge
25	7019644	7019644	7019644	7019644	Baffle — Main Metering — Primary Side
26	7020486	7020487	7020487	7025737	Float Bowl Assembly
27	7019831	7020475	7025687	7025696	Venturi Cluster Assembly — Primary
28	7020332	7020332	7020332	7020332	Venturi Cluster Assembly — Secondary
29	7007803	7007803	7007803	7007803	Gasket — Venturi Cluster
30	7010421	7010421	7010421	7010421	Screw — Venturi Clusters
31	121841	121841	121841	121841	Lockwasher — Cluster Screws
32	7010918	7010918	7010918	7010918	Power Valve Assembly
33	7001613	7001613	7001613	7001613	Gasket — Power Valve
34	7002647	7002648	7002648	7002648	Jet — Primary
34	7002653	7002654	7002654	7002654	Jet — Secondary
35	7019798	7019798	7019798	7019798	Auxiliary Throttle Valve Assembly
36	7015127	7015127	7015127	7015127	Screw — Idle Compensator
37	7013341	7013341	7013341	7013341	Gasket — Idle Compensator
38	7020488	7020488	7024873	7024873	Idle Compensator Kit
			CHOKE PARTS		
39	7016472	7016472	7016472	7016472	Gasket — Choke Housing
40	7024967	7024967	7026680	7024967	Choke Housing Assembly (See Note)
41	7019776	7019776	7019776	7019776	Screw — Choke Housing
42	7010598	7010598	7010598	7010598	Baffle Plate
43	7002760	7002760	7002760	7002760	Gasket — Stat Cover
44	7020489	7020489	7020489	7020489	Stat Cover, Coil and Gasket Assembly
45	7000614	7000614	7000614	7000614	Retainer — Stat Cover
46	7010424	7010424	7010424	7010424	Screw — Stat Cover
47	7000196	7000196	7000196	7000196	Trip Lever
48	7019709	7019709	7019709	7019709	Screw — Trip Lever
49	7009626	7009626	7009626	7009626	Choke Lever and Collar Assembly
50	7000191	7000191	7000191	7000191	Choke Valve
51	7007627	7007627	7007627	7007627	Screw — Choke Valve
52	7012294	7012294	7012294	7012294	Choke Piston
53	7010746	7010746	7010746	7010746	Pin — Choke Piston
54	7012748	7012748	7012748	7012748	Choke Piston Lever and Link Assembly
55	7019709	7019709	7019709	7019709	Screw — Choke Piston Lever
56	7005165	7005165	7005165	7005165	Clip — Intermediate Choke Rod
57	7019815	7019815	7019815	7019815	Intermediate Choke Rod
58	836159	836159	836159	836159	Clip — Intermediate Choke Rod
59	7019812	7019812	7019812	7019812	Intermediate Choke Shaft Assembly
60	7003135	7003135	7003135	7003135	Plug — Expansion
61	7002814	7002814	7002814	7002814	Plug — Lead Ball
62	7010362	7010362	7010362	7010362	Choke Shaft and Lever Assembly
			THROTTLE BODY PARTS		
63	7021639	7021639	7021639	7021639	Gasket — Throttle Body
64	7004324	7004324	7004324	7004324	Screw — Throttle Body — Large
65	7015105	7015105	7015105	7015105	Screw — Throttle Body — Small
66	121744	121744	121744	121744	Lockwasher — Small Screws
67	7020445	7020445	7020445	7020445	Cam — Fast Idle
68	7019773	7019773	7019773	7019773	Screw — Cam Attaching
69	7020350	7020350	7020350	7020350	Choke Rod
70	836159	836159	836159	836159	Clip — Choke Rod
71	1875293	1875293	1875293	1875293	Clip — Pump Rod
72	7013140	7013140	7013140	7013140	Pump Rod
73	7013470	7013470	7013470	7013470	Idle Needle
74	7011479	7011479	7011479	7011479	Spring — Idle Needle
75	7011546	7011546	7011546	7011546	Screw — Fast Idle Adjusting
76	7001690	7001690	7001690	7001690	Spring — Fast Idle and Idle Stop Screws
77	7001619	7001619	7001619	7001619	Idle Stop Screw
78	7010352	7010352	7010352	7010352	Link — Secondary Lever
79	1875293	1875293	1875293	1875293	Clip — Secondary Lever Link
80	7020490	7020490	7020490	7025931	Throttle Body Assembly
81	1353379	1353379	1353379	1353379	Flange Gasket

NOTE: ON 7023044 CARBURETORS WITH NO CHANGE LETTER OR WITH CHANGE LETTER "A" ON THE INSPECTION TAG, USE 7026678 CHOKE MODIFICATION KIT.

United Delco

Delco Rochester
MODEL 2GC CARBURETORS
1962-63 BUICK "SPECIAL" V-6
198 CU. IN. ENGINE

BULLETIN 9C-106
DATE: AUGUST, 1964
PAGE 1
REPLACES ALL PAGES OF 9C-109, OCT., 1962

FOR SPECIFICATIONS SEE BULLETIN 9 BU-1, FOR ADJUSTMENTS SEE BULLETIN 9 BU-3

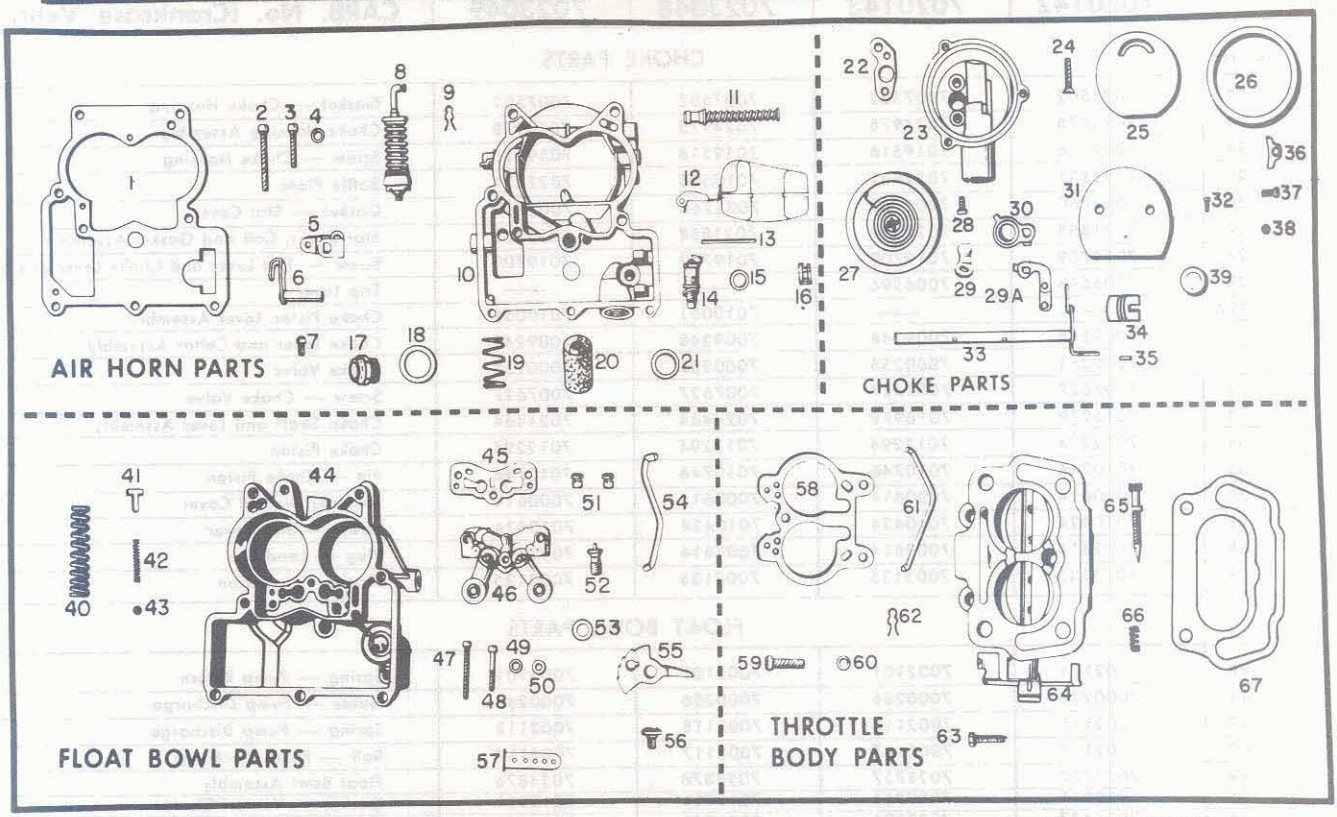

PARTS SHOWN ARE FOR IDENTIFICATION ONLY. CONSULT PARTS LIST FOR CORRECT PART NAME AND NUMBER

	1962	1962	1963	1963	YEAR
	AUTO. TRANS.	SYNCHROMESH	AUTO. TRANS.	SYNCHROMESH	APPLICATION
	7020140	**7020141**	**7023048**	**7023049**	**CARBURETOR No. (Standard)**
	7020142	**7020143**	**7023048**	**7023049**	**CARB. No. (Crankcase Vent)**
	22-104	**22-105**	**22-107**	**22-108**	**REPLACEMENT PACKAGE No.**
	7016239	7016239	7016239	7016239	OVERHAUL KIT
	VTR-102	VTR-102	VTR-102	VTR-102	OK KIT
	40-272	40-272	40-272	40-272	GASKET SET

AIR HORN PARTS

Illus. No.					
1	7021008	7021008	7021008	7021008	Gasket — Air Horn
2	7010432	7010432	7010432	7010432	Screw — Air Horn — Long
3	7006119	7006119	7006119	7006119	Screw — Air Horn — Short
4	120217	120217	120217	120217	Lockwasher — Air Horn Screws
5	7000266	7000266	7000266	7000266	Pump Lever — Inside
6	7017506	7017506	7017506	7017506	Pump Shaft and Lever Assembly
7	7010424	7010424	7010424	7010424	Screw — Pump Lever
8	7019368	7019368	7019368	7019368	Pump Assembly
9	1875293	1875293	1875293	1875293	Clip — Pump Plunger
10	7021756	7021756	7024874	7024874	Air Horn Assembly
11	7009718	7009718	7009718	7009718	Power Piston Assembly
12	7012974	7012974	7012974	7012974	Float Assembly
13	7002081	7002081	7002081	7002081	Pin — Float Hinge
14	30-9	30-9	30-9	30-9	Needle and Seat Assembly
15	7019535	7019535	7019535	7019535	Gasket — Needle Seat
16	7006079	7006079	7006079	7006079	Strainer — Needle Seat
17	7019181	7019181	7013525	7013525	Filter Nut — Fuel Inlet
18	7010010	7010010	7010010	7010010	Gasket — Filter Nut
19	7010007	7010007	7010007	7010007	Spring — Fuel Filter
20	7013404	7013404	7013404	7013404	Filter — Fuel Inlet
21	7013584	7013584	7013584	7013584	Gasket — Fuel Filter

© 1964 GENERAL MOTORS CORP.

	1962	1962	1963	1963	YEAR
	AUTO. TRANS.	SYNCHROMESH	AUTO. TRANS.	SYNCHROMESH	APPLICATION
	7020140	**7020141**	**7023048**	**7023049**	**CARBURETOR No. (Standard)**
	7020142	**7020143**	**7023048**	**7023049**	**CARB. No. (Crankcase Vent)**
Illus. No.			CHOKE PARTS		
22	7007502	7007502	7007502	7007502	Gasket — Choke Housing
23	7024975	7024978	7024975	7024978	Choke Housing Assembly
24	7019516	7019516	7019516	7019516	Screw — Choke Housing
25	7022831	7022831	7010598	7022831	Baffle Plate
26	7002760	7002760	7002760	7002760	Gasket — Stat Cover
27	7021858	7021858	7021858	7025409	Stat Cover, Coil and Gasket Assembly
28	7019709	7019709	7019709	7019709	Screw — Trip Lever and Choke Lever and Link
29	7006596	7006596	——	——	Trip Lever
29A	——	——	7010051	7010051	Choke Piston Lever Assembly
30	7009248	7009248	7009248	7009248	Choke Lever and Collar Assembly
31	7000255	7000255	7000255	7000255	Choke Valve
32	7007627	7007627	7007627	7007627	Screw — Choke Valve
33	7016979	7016979	7024464	7024464	Choke Shaft and Lever Assembly
34	7012294	7012294	7012294	7012294	Choke Piston
35	7010746	7010746	7010746	7010746	Pin — Choke Piston
36	7000614	7000614	7000614	7000614	Retainer — Stat Cover
37	7010424	7010424	7010424	7010424	Screw — Stat Cover
38	7002814	7002814	7002814	7002814	Plug — Lead Ball
39	7003135	7003135	7003135	7003135	Plug — Expansion
			FLOAT BOWL PARTS		
40	7002101	7002101	7002101	7002101	Spring — Pump Return
41	7000286	7000286	7000286	7000286	Guide — Pump Discharge
42	7002118	7002118	7002118	7002118	Spring — Pump Discharge
43	7002117	7002117	7002117	7002117	Ball — Pump Discharge
44	7021757	7021757	7024876	7024876	Float Bowl Assembly
45	7019911	7019911	7019911	7019911	Gasket — Venturi Cluster
46	7021477	7022206	7026549	7026551	Venturi Cluster Assembly
47	7000293	7000293	7000293	7000293	Screw — Cluster — Outer
48	7000294	7000294	7000294	7000294	Screw — Cluster — Center
49	7000295	7000295	7000295	7000295	Gasket — Center Screw
50	121841	121841	121841	121841	Lockwasher — Outer Screws
51	7002644	7002644	7002644	7002644	Jet — Standard (All)
51	7002643	7002643	7002643	7002643	Jet — Altitude (All)
52	7004659	7004659	7004659	7004659	Power Valve Assembly
53	7001613	7001613	7001613	7001613	Gasket — Power Valve
54	7021459	7021459	7021459	7021459	Choke Rod
55	7017771	7017783	7017771	7017783	Fast Idle Cam
56	7019773	7019773	7019773	7019773	Screw — Cam Attaching
57	7021528	7021528	7021528	7021528	Insert — Main Well
			THROTTLE BODY PARTS		
58	7021232	7021232	7021232	7021232	Gasket — Throttle Body
59	7015105	7015105	7015105	7015105	Screw — Throttle Body
60	121744	121744	121744	121744	Lockwasher — Throttle Body Screws
61	7021458	7021458	7024540	7024540	Pump Rod
62	1875293	1875293	1875293	1875293	Clip — Pump Rod
63	7006213	7006213	7006213	7006213	Idle Stop Screw
64	7022210	7022210	7024877	7024877	Throttle Body Assembly
65	7013470	7013470	7013470	7013470	Idle Needle
66	7011479	7011479	7011479	7011479	Spring — Idle Needle
67	1352196	1352196	1352196	1352196	Gasket — Flange

United Delco

Delco Rochester

MODEL 4GC CARBURETORS

1961-1963 BUICK "SPECIAL"

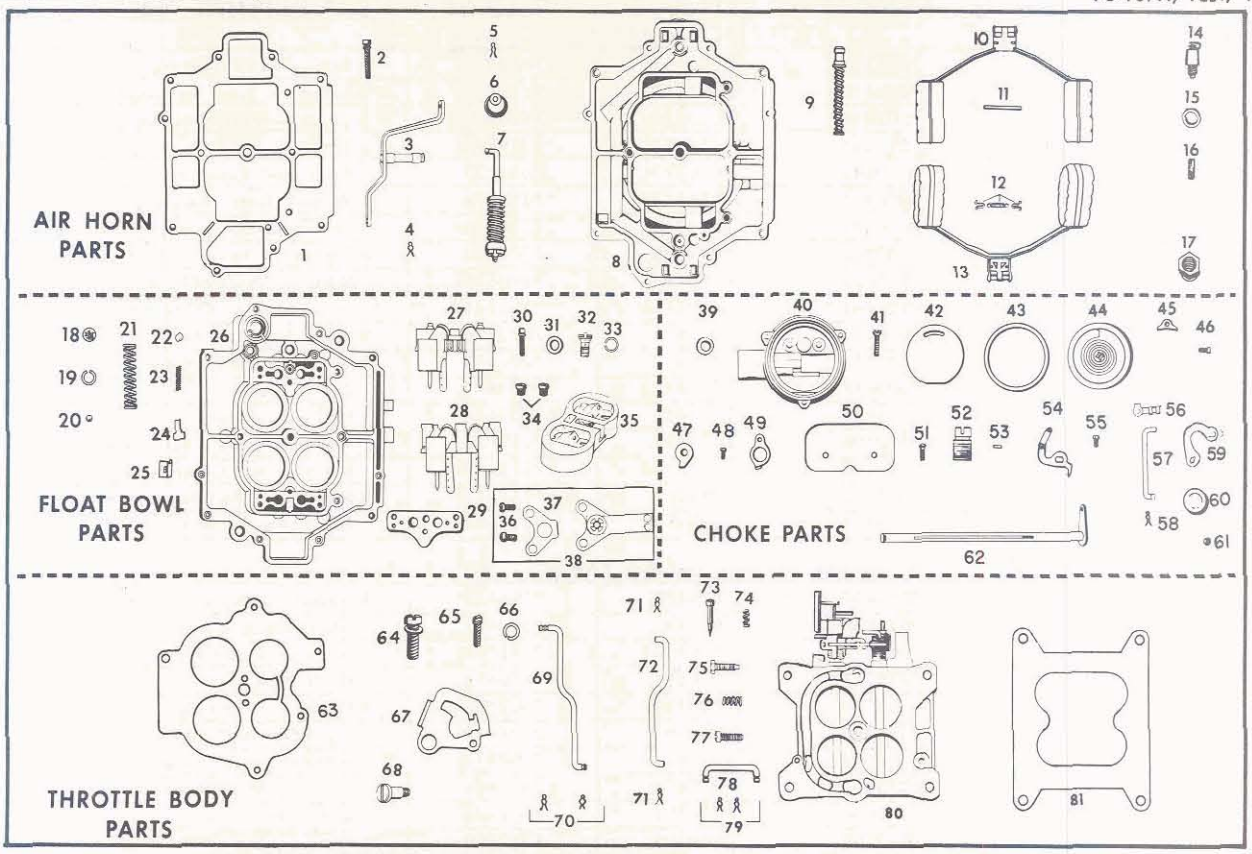

PARTS SHOWN ARE FOR IDENTIFICATION ONLY. CONSULT PARTS LIST FOR CORRECT PART NAME AND NUMBER

	1961-62		1963		YEAR
	DYNAFLOW	SYNCHROMESH	DYNAFLOW	SYNCHROMESH	APPLICATION
	7020043	**7020045**	**7023044**	**7023045**	**CARBURETOR No.**
	24-105	**24-106**	**24-105B**	**24-106B**	**REPLACEMENT PACKAGE No.**
	7016249	7016249	7016249	7016249	OVERHAUL KIT
	FR-105A	FR-105A	FR-105A	FR-105A	OK KIT (STEEL)
	VFR-105A	VFR-105A	VFR-105A	VFR-105A	OK KIT (NEO-tiP)
	7016250	7016250	7016250	7016250	GASKET SET
	7022927	7022928	7025902	7025903	ALTITUDE KIT
Illus. No.			AIR HORN PARTS		
1	7015136	7015136	7015136	7015136	★Gasket — Air Horn
2	7000249	7000249	7000249	7000249	Screw — Air Horn
3	7020354	7020354	7020354	7020354	Pump Shaft and Lever Assembly
4	7017735	7017735	7017735	7017735	★Clip — Pump Lever
5	1875293	1875293	1875293	1875293	★Clip — Pump Plunger
6	7006372	7006372	7006372	7006372	★Boot — Pump Plunger
7	7020246	7020246	7020246	7020246	★Pump Assembly
8	7013585	7013585	7021431	7021431	Air Horn Assembly
9	7020338	7020338	7025738	7025738	Power Piston Assembly
10	7016674	7016674	7016674	7016674	Float Assembly — Primary
11	7001595	7001595	7001595	7001595	Pin — Float Hinge
12	7001850	7001850	7001850	7001850	★Float Balance Spring and Clips
13	7012148	7012148	7012148	7012148	Float Assembly — Secondary
14	7012906	7012906	7012906	7012906	★Needle and Seat Assembly
15	7019535	7019535	7019535	7019535	★Gasket — Needle Seats
16	7006079	7006079	7006079	7006079	★Strainer — Needle Seats
17	145475	145475	5620839	5620839	Fitting — Fuel Inlet
			FLOAT BOWL PARTS		
18	7001604	7001604	7001604	7001604	★Screen — Pump Inlet
19	7001605	7001605	7001605	7001605	★Retainer — Pump Inlet Screen
20	7002120	7002120	7002120	7002120	★Ball — Pump Inlet Check
21	7008694	7008694	7008694	7008694	★Spring — Pump Return

★ OVERHAUL KIT CONTENTS

PRINTED IN U.S.A.
I.P.S.

	1961-62		1963		YEAR
	DYNAFLOW	SYNCHROMESH	DYNAFLOW	SYNCHROMESH	APPLICATION
	7020043	**7020045**	**7023044**	**7023045**	**CARBURETOR No.**
Illus. No.	FLOAT BOWL PARTS (Continued)				
22	7002117	7002117	7002117	7002117	★Ball — Pump Discharge
23	7002118	7002118	7002118	7002118	★Spring — Pump Discharge
24	7003838	7003838	7003838	7003838	★Guide — Pump Discharge
25	7019644	7019644	7019644	7019644	Baffle — Main Metering — Primary Side
26	7020486	7020487	7020487	7025737	Float Bowl Assembly
27	7019831	7020475	7025687	7025696	Venturi Cluster Assembly — Primary
28	7020332	7020332	7020332	7020332	Venturi Cluster Assembly — Secondary
29	7007803	7007803	7007803	7007803	★Gasket — Venturi Cluster
30	7010421	7010421	7010421	7010421	Screw — Venturi Clusters
31	121841	121841	121841	121841	Lockwasher — Cluster Screws
32	7010918	7010918	7010918	7010918	★Power Valve Assembly
33	7001613	7001613	7001613	7001613	★Gasket — Power Valve
34	7002647	7002648	7002646	7002647	Jet — Primary
34	7002653	7002654	7002654	7002654	Jet — Secondary
35	7019798	7019798	7019798	7019798	Auxiliary Throttle Valve Assembly
36	7015127	7015127	7015127	7015127	Screw — Idle Compensator
37	7013341	7013341	7013341	7013341	★Gasket — Idle Compensator
38	7020488	7020488	7024873	7024873	Idle Compensator Kit
	CHOKE PARTS				
39	7016472	7016472	7016472	7016472	★Gasket — Choke Housing
40	7024967	7024967	7024967	7024967	Choke Housing Assembly
41	7019776	7019776	7019776	7019776	Screw — Choke Housing
42	7010598	7010598	7010598	7010598	Baffle Plate
43	7002760	7002760	7002760	7002760	★Gasket — Stat Cover
44	7020489	7020489	7020489	7020489	Stat Cover, Coil and Gasket Assembly
45	7000614	7000614	7000614	7000614	Retainer — Stat Cover
46	7010424	7010424	7010424	7010424	Screw — Stat Cover
47	7000196	7000196	7000196	7000196	Trip Lever
48	7019709	7019709	7019709	7019709	Screw — Trip Lever
49	7009626	7009626	7009626	7009626	Choke Lever and Collar Assembly
50	7000191	7000191	7000191	7000191	Choke Valve
51	7007627	7007627	7007627	7007627	Screw — Choke Valve
52	7012294	7012294	7012294	7012294	Choke Piston
53	7010746	7010746	7010746	7010746	Pin — Choke Piston
54	7012748	7012748	7012748	7012748	Choke Piston Lever and Link Assembly
55	7019709	7019709	7019709	7019709	Screw — Choke Piston Lever
56	7005165	7005165	7005165	7005165	★Clip — Intermediate Choke Rod
57	7019815	7019815	7019815	7019815	Intermediate Choke Rod
58	836159	836159	836159	836159	★Clip — Intermediate Choke Rod
59	7019812	7019812	7019812	7019812	Intermediate Choke Shaft Assembly
60	7003135	7003135	7003135	7003135	Plug — Expansion
61	7002814	7002814	7002814	7002814	Plug — Lead Ball
62	7010362	7010362	7010362	7010362	Choke Shaft and Lever Assembly
	THROTTLE BODY PARTS				
63	7021639	7021639	7021639	7021639	★Gasket — Throttle Body
64	7004324	7004324	7004324	7004324	Screw — Throttle Body — Large
65	7015105	7015105	7015105	7015105	Screw — Throttle Body — Small
66	121744	121744	121744	121744	Lockwasher — Small Screws
67	7020445	7020445	7020445	7020445	Cam — Fast Idle
68	7019773	7019773	7019773	7019773	Screw — Cam Attaching
69	7020350	7020350	7020350	7020350	Choke Rod
70	836159	836159	836159	836159	★Clip — Choke Rod
71	1875293	1875293	1875293	1875293	★Clip — Pump Rod
72	7013140	7013140	7013140	7013140	Pump Rod
73	7013470	7013470	7013470	7013470	★Idle Needle
74	7011479	7011479	7011479	7011479	Spring — Idle Needle
75	7011546	7011546	7011546	7011546	Screw — Fast Idle Adjusting
76	7001690	7001690	7001690	7001690	Spring — Fast Idle and Idle Stop Screws
77	7001619	7001619	7001619	7001619	Idle Stop Screw
78	7010352	7010352	7010352	7010352	Link — Secondary Lever
79	1875293	1875293	1875293	1875293	★Clip — Secondary Lever Link
80	7020490	7020490	7020490	7025931	Throttle Body Assembly
81	1353379	1353379	1353379	1353379	★Flange Gasket

★ OVERHAUL KIT CONTENTS

PRINTED IN U.S.A.

United Delco

Delco Rochester

MODEL 2GC CARBURETORS

1962 BUICK LE SABRE V-8

401 CU. IN. ENGINE

FOR SPECIFICATIONS SEE BULLETIN 9 BU-1, FOR ADJUSTMENTS SEE BULLETIN 9 BU-3

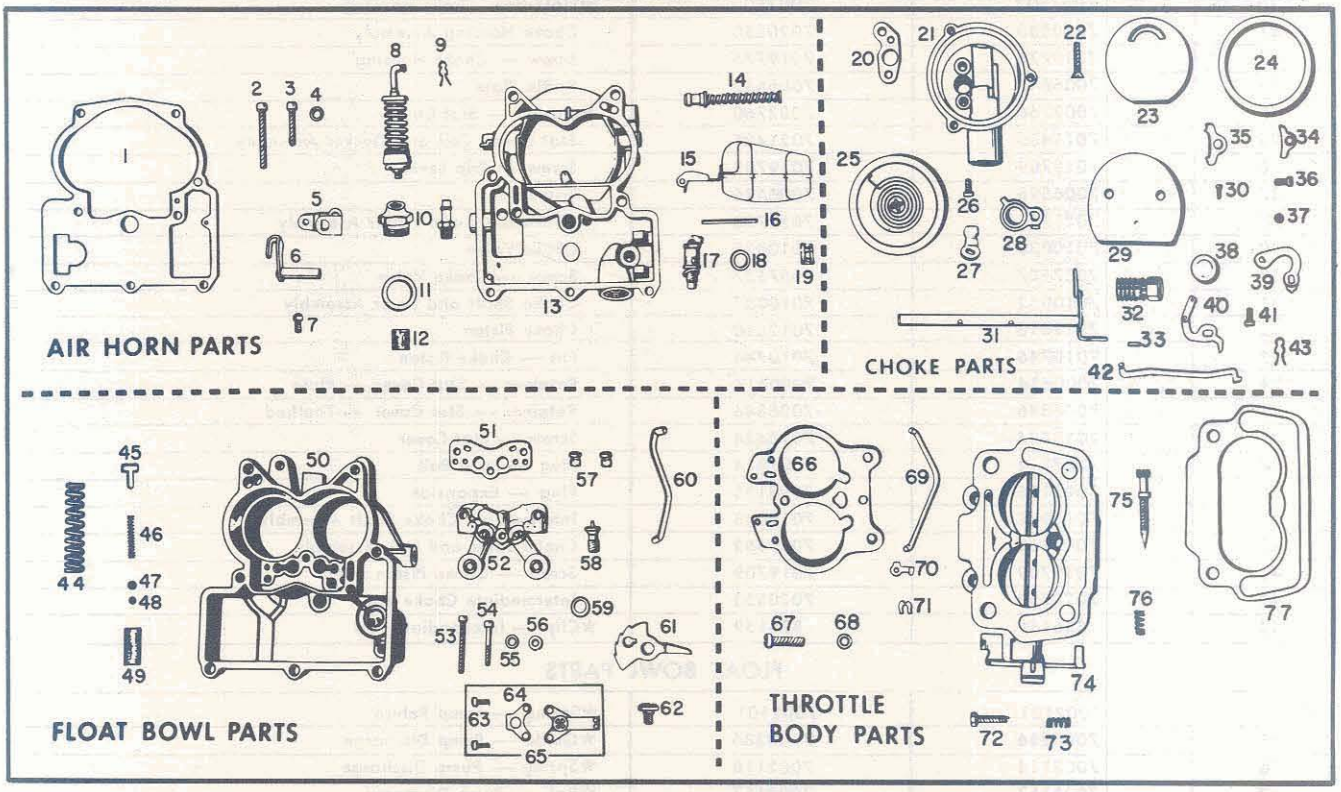

PARTS SHOWN ARE FOR IDENTIFICATION ONLY. CONSULT PARTS LIST FOR CORRECT PART NAME AND NUMBER

	AUTO. TRANS. STANDARD	AUTO. TRANS. AIR COND.	APPLICATION
	7020046	**7020047**	**CARBURETOR No. (Standard)**
	7020048	**7020049**	**CARB. No. (Crankcase Vent)**
	22-103	**22-103**	**REPLACEMENT PACKAGE No.**
	7016220	7016220	OVERHAUL KIT
	VTR-101	VTR-101	OK KIT
	40-268	40-268	GASKET SET
Illus. No.			AIR HORN PARTS
1	7021007	7021007	★Gasket — Air Horn
2	7010432	7010432	Screw — Air Horn — Long
3	7006119	7006119	Screw — Air Horn — Short
4	120217	120217	Lockwasher — Air Horn Screws
5	7000266	7000266	Pump Lever — Inside
6	7019511	7019511	Pump Shaft and Lever Assembly
7	7010424	7010424	Screw — Pump Lever
8	7016475	7016475	★Pump Assembly
9	1875293	1875293	★Clip — Pump Plunger
10	7000262	7000262	Strainer Nut — Fuel Inlet
11	7001597	7001597	★Gasket — Strainer Nut
12	7000261	7000261	★Strainer — Fuel Inlet
13	7021434	7021434	Air Horn Assembly
14	7006323	7006323	Power Piston Assembly
15	7012028	7012028	Float Assembly
16	7010037	7010037	Pin — Float Hinge
17	30-13	30-13	★Needle and Seat Assembly
18	7019535	7019535	★Gasket — Needle Seat
19	7006079	7006079	Strainer — Needle Seat

★ OVERHAUL KIT CONTENTS

	STANDARD	AIR CONDITIONED	APPLICATION
	7020046	7020047	CARBURETOR No. (STANDARD)
	7020048	7020049	CARBURETOR No. (CRANKCASE VENT)
Illus. No.		CHOKE PARTS	
20	7007502	7007502	★Gasket — Choke Housing
21	7020550	7020550	Choke Housing Assembly
22	7019776	7019776	Screw — Choke Housing
23	7006643	7006643	Baffle Plate
24	7002760	7002760	★Gasket — Stat Cover
25	7021435	7021435	Stat Cover, Coil and Gasket Assembly
26	7019709	7019709	Screw — Trip Lever
27	7006596	7006596	Trip Lever
28	7021793	7021793	Choke Lever and Collar Assembly
29	7010035	7010035	Choke Valve
30	7007627	7007627	Screw — Choke Valve
31	7010032	7010032	Choke Shaft and Lever Assembly
32	7012610	7012610	Choke Piston
33	7010746	7010746	Pin — Choke Piston
34	7000614	7000614	Retainer — Stat Cover — Plain
35	7006846	7006846	Retainer — Stat Cover — Toothed
36	7010424	7010424	Screw — Stat Cover
37	7002814	7002814	Plug — Lead Ball
38	7003135	7003135	Plug — Expansion
39	7010048	7010048	Intermediate Choke Shaft Assembly
40	7009852	7009852	Choke Lever and Link Assembly
41	7019709	7019709	Screw — Choke Piston Lever
42	7020553	7020553	Intermediate Choke Rod
43	836159	836159	★Clip — Intermediate Rod
		FLOAT BOWL PARTS	
44	7002101	7002101	★Spring — Pump Return
45	7000286	7000286	★Guide — Pump Discharge
46	7002118	7002118	★Spring — Pump Discharge
47	7002117	7002117	★Ball — Pump Discharge
48	7002120	7002120	★Ball — Pump Inlet Check
49	7004557	7004557	★Strainer — Pump Inlet
50	7021436	7021436	Float Bowl Assembly
51	7019533	7019533	★Gasket — Venturi Cluster
52	7020539	7020539	Venturi Cluster Assembly
53	7008502	7008502	Screw — Cluster — Outer
54	7009077	7009077	Screw — Cluster — Center
55	7008892	7008892	★Gasket — Center Screw
56	120217	120217	Lockwasher — Outer Screws
57	7002660	7002660	Jet — Standard
58	7011989	7011989	★Power Valve Assembly
59	7011990	7011990	★Gasket — Power Valve
60	7010055	7010055	Choke Rod
61	7020541	7020541	Cam — Fast Idle
62	7019773	7019773	Screw — Cam Attaching
63	7015127	7015127	Screw — Idle Compensator
64	7013341	7013341	★Gasket — Idle Compensator
65	7021523	7021523	Idle Compensator Kit
		THROTTLE BODY PARTS	
66	7015106	7015106	★Gasket — Throttle Body
67	7015105	7015105	Screw — Throttle Body
68	121744	121744	Lockwasher — Throttle Body
69	7021440	7021440	Pump Rod
70	7003137	7003137	★Clip — Pump Rod — Upper
71	7005032	7005032	★Clip — Pump Rod — Lower
72	7006213	7006213	Fast Idle Screw
73	7001690	7001690	Spring — Fast Idle Screw
74	7021437	7021437	Throttle Body Assembly
75	7013116	7013116	★Idle Needle
76	7011479	7011479	Spring — Idle Needles
77	1351368	1351368	★Gasket — Flange

★ OVERHAUL KIT CONTENTS

United Delco

Delco Rochester

MODEL 2GC CARBURETORS

1962-63 BUICK "SPECIAL" V-6

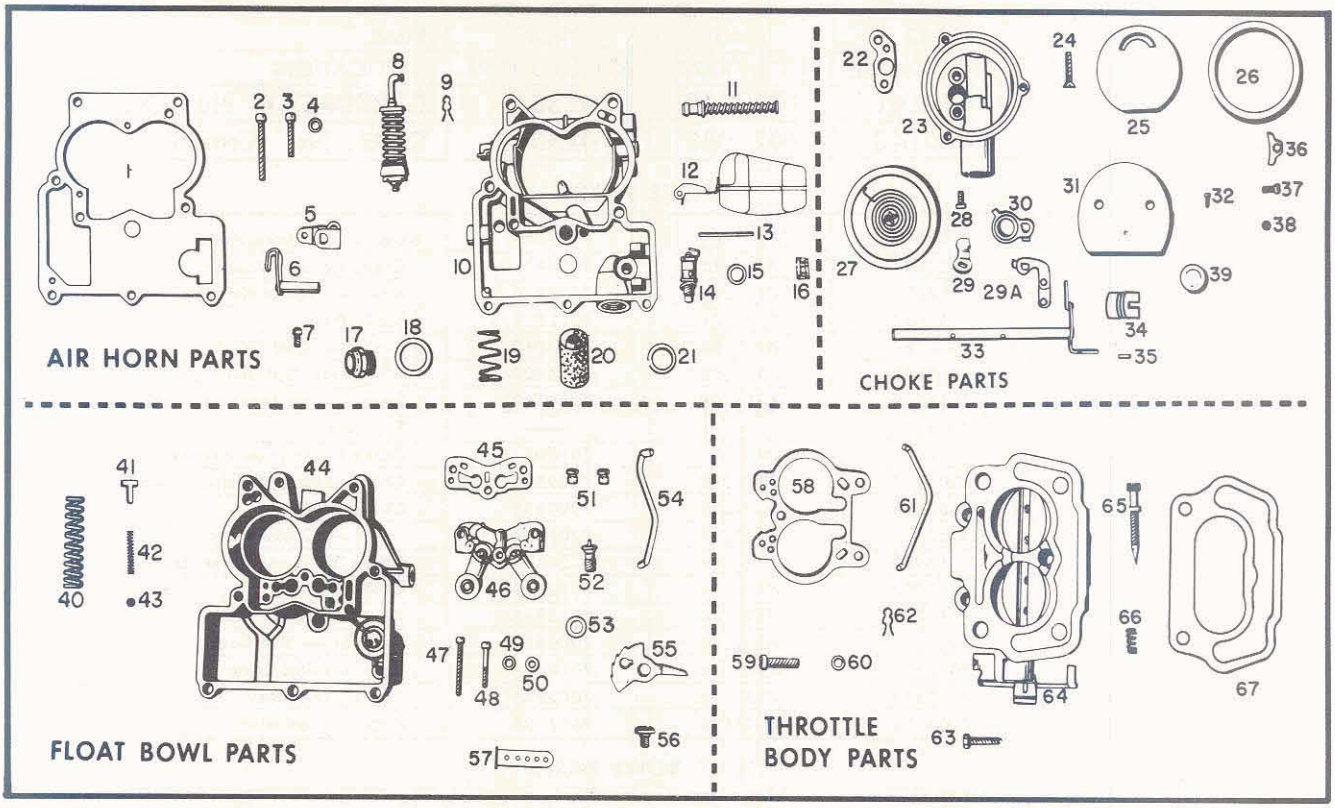

PARTS SHOWN ARE FOR IDENTIFICATION ONLY. CONSULT PARTS LIST FOR CORRECT PART NAME AND NUMBER

	1962	1962	1963	1963	YEAR
	AUTO. TRANS.	SYNCHROMESH	AUTO. TRANS.	SYNCHROMESH	APPLICATION
	7020140	**7020141**	**7023048**	**7023049**	**CARBURETOR No. (Standard)**
	7020142	**7020143**	**7023048**	**7023049**	**CARB. No. (Crankcase Vent)**
	22-104	**22-105**	**22-107**	**22-108**	**REPLACEMENT PACKAGE No.**
	7016239	7016239	7016239	7016239	OVERHAUL KIT
	TR-102	TR-102	TR-102	TR-102	OK KIT (STEEL)
	VTR-102	VTR-102	VTR-102	VTR-102	OK KIT (NEO-tiP)
	7016246	7016246	7016246	7016246	GASKET SET
Illus. No.			AIR HORN PARTS		
1	7021008	7021008	7021008	7021008	★Gasket — Air Horn
2	7010432	7010432	7010432	7010432	Screw — Air Horn — Long
3	7006119	7006119	7006119	7006119	Screw — Air Horn — Short
4	120217	120217	120217	120217	Lockwasher — Air Horn Screws
5	7000266	7000266	7000266	7000266	Pump Lever — Inside
6	7017506	7017506	7017506	7017506	Pump Shaft and Lever Assembly
7	7010424	7010424	7010424	7010424	Screw — Pump Lever
8	7019368	7019368	7019368	7019368	★Pump Assembly
9	1875293	1875293	1875293	1875293	★Clip — Pump Plunger
10	7021756	7021756	7024874	7024874	Air Horn Assembly
11	7009718	7009718	7009718	7009718	Power Piston Assembly
12	7012974	7012974	7012974	7012974	Float Assembly
13	7002081	7002081	7002081	7002081	Pin — Float Hinge
14	7012524	7012524	7012524	7012524	★Needle and Seat Assembly
15	7019535	7019535	7019535	7019535	★Gasket — Needle Seat
16	7006079	7006079	7006079	7006079	★Strainer — Needle Seat
17	7019181	7019181	7013525	7013525	Filter Nut — Fuel Inlet
18	7010010	7010010	7010010	7010010	★Gasket — Filter Nut
19	7010007	7010007	7010007	7010007	Spring — Fuel Filter
20	7013404	7013404	7013404	7013404	Filter — Fuel Inlet
21	7013584	7013584	7013584	7013584	★Gasket — Fuel Filter

★ OVERHAUL KIT CONTENTS

PRINTED IN U.S.A.
I.P.S.

	1962	1962	1963	1963	YEAR
	AUTO. TRANS.	SYNCHROMESH	AUTO. TRANS.	SYNCHROMESH	APPLICATION
	7020140	**7020141**	**7023048**	**7023049**	**CARBURETOR No. (Standard)**
	7020142	**7020143**	**7023048**	**7023049**	**CARB. No. (Crankcase Vent)**
Illus. No.			CHOKE PARTS		
22	7007502	7007502	7007502	7007502	★Gasket — Choke Housing
23	7021760	7022694	7024975	7024978	Choke Housing Assembly
24	7019516	7019516	7019516	7019516	Screw — Choke Housing
25	7022831	7022831	7022831	7022831	Baffle Plate
26	7002760	7002760	7002760	7002760	★Gasket — Stat Cover
27	7021858	7021858	7021858	7025409	Stat Cover, Coil and Gasket Assembly
28	7019709	7019709	7019709	7019709	Screw — Trip Lever and Choke Lever and Link
29	7006596	7006596	——	——	Trip Lever
29A	——	——	7010051	7010051	Choke Piston Lever Assembly
30	7009248	7009248	7009248	7009248	Choke Lever and Collar Assembly
31	7000255	7000255	7000255	7000255	Choke Valve
32	7007627	7007627	7007627	7007627	Screw — Choke Valve
33	7016979	7016979	7024464	7024464	Choke Shaft and Lever Assembly
34	7012294	7012294	7012294	7012294	Choke Piston
35	7010746	7010746	7010746	7010746	Pin — Choke Piston
36	7000614	7000614	7000614	7000614	Retainer — Stat Cover
37	7010424	7010424	7010424	7010424	Screw — Stat Cover
38	7002814	7002814	7002814	7002814	Plug — Lead Ball
39	7003135	7003135	7003135	7003135	Plug — Expansion
			FLOAT BOWL PARTS		
40	7002101	7002101	7002101	7002101	★Spring — Pump Return
41	7000286	7000286	7000286	7000286	★Guide — Pump Discharge
42	7002118	7002118	7002118	7002118	★Spring — Pump Discharge
43	7002117	7002117	7002117	7002117	★Ball — Pump Discharge
44	7021757	7021757	7024876	7024876	Float Bowl Assembly
45	7019911	7019911	7019911	7019911	★Gasket — Venturi Cluster
46	7021477	7022206	7025773	7025779	Venturi Cluster Assembly
47	7000293	7000293	7000293	7000293	Screw — Cluster — Outer
48	7000294	7000294	7000294	7000294	Screw — Cluster — Center
49	7000295	7000295	7000295	7000295	★Gasket — Center Screw
50	121841	121841	121841	121841	Lockwasher — Outer Screws
51	7002644	7002644	7002644	7002644	Jet — Standard (All)
51	7002643	7002643	7002643	7002643	Jet — Altitude (All)
52	7004659	7004659	7004659	7004659	★Power Valve Assembly
53	7001613	7001613	7001613	7001613	★Gasket — Power Valve
54	7021459	7021459	7021459	7021459	Choke Rod
55	7017771	7017783	7017771	7017783	Fast Idle Cam
56	7019773	7019773	7019773	7019773	Screw — Cam Attaching
57	7009212	7009212	7009212	7009212	Insert — Main Well
			THROTTLE BODY PARTS		
58	7021232	7021232	7021232	7021232	★Gasket — Throttle Body
59	7015105	7015105	7015105	7015105	Screw — Throttle Body
60	121744	121744	121744	121744	Lockwasher—Throttle Body Screws
61	7021458	7021458	7024540	7024540	Pump Rod
62	1875293	1875293	1875293	1875293	★Clip — Pump Rod
63	7006213	7006213	7006213	7006213	Idle Stop Screw
64	7022210	7022210	7024877	7024877	Throttle Body Assembly
65	7013470	7013470	7013470	7013470	★Idle Needle
66	7011479	7011479	7011479	7011479	Spring — Idle Needle
67	1352196	1352196	1352196	1352196	★Gasket — Flange

★ OVERHAUL KIT CONTENTS

United Delco

Delco Rochester

MODEL 4GC CARBURETORS
1963-1965 BUICK V-8
401 CU. IN. ENGINE

FOR SPECIFICATIONS SEE BULLETIN 9 BU-1, FOR ADJUSTMENTS SEE BULLETIN 9 BU-4

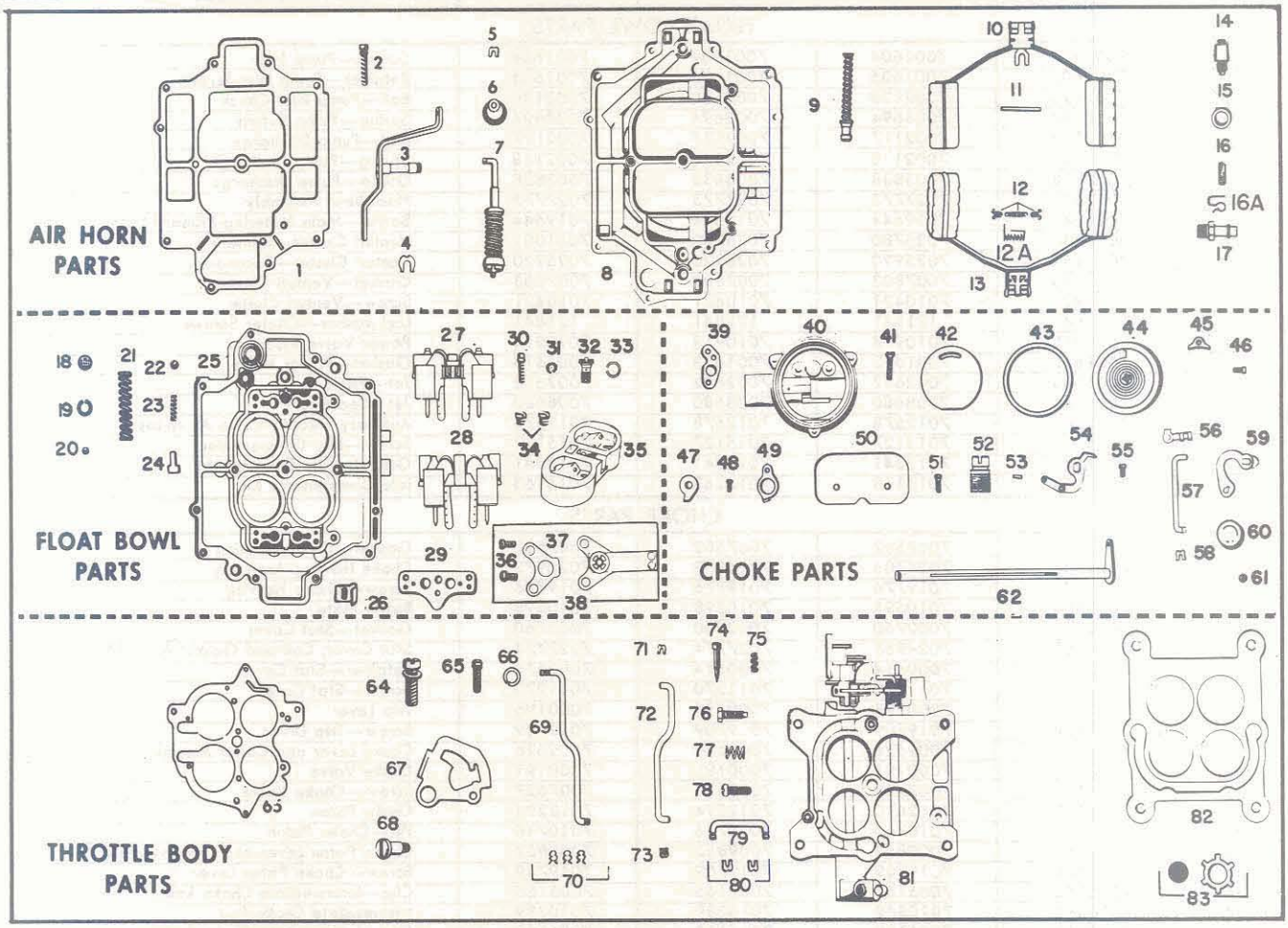

PARTS SHOWN ARE FOR IDENTIFICATION ONLY. CONSULT PARTS LIST FOR CORRECT PART NAME AND NUMBER

	1963 EARLY	1963 LATE	1964	1965	YEAR
	7023040	**7023143**	**7024040**	**7025040**	**CARBURETOR No.**
	24-107	**24-107**	**24-108**	**24-111**	**REPLACEMENT PACKAGE No.**
	7016442	7016442	7016442	7016530	OVERHAUL KIT
	VFR-104	VFR-104	VFR-104	VFR-107	OK KIT
	40-235	40-235	40-235	40-306	GASKET SET
	7025901	7028656	7028656	7028656	ALTITUDE KIT
Illus. No.	AIR HORN PARTS				
1	7015136	7015136	7015136	7028964	Gasket—Air Horn
2	7000249	7000249	7000249	7000249	Screw—Air Horn
3	7013143	7013143	7013143	7013143	Pump Shaft and Lever Assembly
4	7007616	7007616	7007616	7007616	Clip—Pump Lever
5	7005032	7005032	7005032	7005032	Clip—Pump Plunger
6	7006372	7006372	7006372	7006372	Boot—Pump Plunger
7	7012417	7012417	7012417	7012417	Pump Assembly
8	7029706	7029706	7029706	7029706	Air Horn Assembly
9	7025738	7025738	7025738	7025738	Power Piston Assembly
10	7016674	7016674	7016674	7028875	Float Assembly—Primary
11	7001595	7001595	7001595	7001595	Pin—Float Hinge
12	7001850	7001850	7001850	—	Float Balance Spring and Clips
12A	—	—	—	7028873	Torsion Spring
13	7012148	7012148	7012148	7028875	Float Assembly—Secondary
14	30-11	30-11	30-11	30-11	Needle and Seat Assembly—Primary
14	30-7	30-7	30-7	30-7	Needle and Seat Assembly—Secondary
15	7019535	7019535	7019535	7019535	Gasket—Needle Seats
16	7006079	7006079	7006079	7006079	Strainer—Needle Seats
16A	7006474	7006474	7006474	7006474	Pull Clip—Float Needle
17	5620839	5620839	5620839	5620839	Fitting—Fuel Inlet

	1963 EARLY	1963 LATE	1964	1965	YEAR
	7023040	**7023143**	**7024040**	**7025040**	**CARBURETOR No.**
Illus. No.			FLOAT BOWL PARTS		
18	7001604	7001604	7001604	7001604	Screen—Pump Inlet
19	7001605	7001605	7001605	7001605	Retainer—Pump Inlet Screen
20	7002120	7002120	7002120	7002120	Ball—Pump Inlet Check
21	7008694	7008694	7008694	7008694	Spring—Pump Return
22	7002117	7002117	7002117	7002117	Ball—Pump Discharge
23	7002118	7002118	7002118	7002118	Spring—Pump Discharge
24	7003838	7003838	7003838	7003838	Guide—Pump Discharge
25	7019579	7027773	7027773	7027773	Float Bowl Assembly
26	7019644	7019644	7019644	7019644	Baffle—Main Metering-Primary Side
27	7025780	7025780	7025780	7031001	Venturi Cluster—Primary
28	7013463	7025920	7025920	7025920	Venturi Cluster—Secondary
29	7007803	7007803	7007803	7007803	Gasket—Venturi Cluster
30	7010421	7010421	7010421	7010421	Screw—Venturi Cluster
31	121841	121841	121841	121841	Lockwasher—Cluster Screws
32	7010918	7010918	7010918	7010918	Power Valve Assembly
33	7001613	7001613	7001613	7001613	Gasket—Power Valve
34	7002653	7002652	7002652	7002652	Jet—Primary
35	7008676	7008680	7008680	7008680	Jet—Secondary
35	7012578	7012578	7012578	7012578	Auxiliary Throttle Valve Assembly
36	7015127	7015127	7015127	7015127	Screw—Idle Compensator
37	7013341	7013341	7013341	7013341	Gasket—Idle Compensator
38	7015163	7015163	7015163	7015163	Idle Compensator Kit
			CHOKE PARTS		
39	7007502	7007502	7007502	7007502	Gasket—Choke Housing
40	7024706	7024706	7026972	7026972	Choke Housing Assembly
41	7019776	7019776	7019776	7019776	Screw—Choke Housing
42	7010598	7010598	7010598	7010598	Baffle Plate
43	7002760	7002760	7002760	7002760	Gasket—Stat Cover
44	7024965	7024965	7027774	7027774	Stat Cover, Coil and Gasket Assembly
45	7000614	7000614	7000614	7000614	Retainer—Stat Cover
46	7011270	7011270	7011270	7011270	Screw—Stat Cover
47	7000196	7000196	7000196	7000196	Trip Lever
48	7019709	7019709	7019709	7019709	Screw—Trip Lever
49	7009626	7009626	7009626	7009626	Choke Lever and Collar Assembly
50	7000191	7000191	7000191	7000191	Choke Valve
51	7007627	7007627	7007627	7007627	Screw—Choke Valve
52	7012610	7012610	7012294	7012294	Choke Piston
53	7010746	7010746	7010746	7010746	Pin—Choke Piston
54	7009852	7009852	7009852	7009852	Choke Piston Lever and Link Assembly
55	7019709	7019709	7019709	7019709	Screw—Choke Piston Lever
56	7005165	7005165	7005165	7005165	Clip—Intermediate Choke Rod
57	7010389	7010389	7010389	7010389	Intermediate Choke Rod
58	7005109	7005109	7005109	7005109	Clip—Intermediate Choke Rod
59	7010048	7010048	7010048	7010048	Intermediate Choke Shaft Assembly
60	7003135	7003135	7003135	7003135	Plug Expansion
61	7002814	7002814	7002814	7002814	Plug—Lead Ball
62	7010362	7010362	7010362	7010362	Choke Shaft and Lever Assembly
			THROTTLE BODY PARTS		
63	7013471	7013471	7013471	7013471	Gasket—Throttle Body
64	7004324	7004324	7004324	7004324	Screw—Throttle Body—Large
65	7015105	7015105	7015105	7015105	Screw—Throttle Body—Small
66	121744	121744	121744	121744	Lockwasher—Small Screws
67	7019275	7019275	7026857	7029553	Cam—Fast Idle
68	7003561	7003561	7003561	7003561	Screw—Cam Attaching
69	7019276	7019276	7019276	7019276	Choke Rod
70	836159	836159	836159	836159	Clip—Choke Rod
71	7005032	7005032	7005032	7005032	Clip—Pump Rod
72	7013140	7013140	7013140	7013140	Pump Rod
73	7005032	7005032	7005032	7005032	Clip—Pump Rod
74	7013470	7013470	7013470	7013470	Idle Needle
75	7011479	7011479	7011479	7011479	Spring—Idle Needle
76	7011546	7011546	7011546	7029427	Screw—Fast Idle
77	7001690	7001690	7001690	7029428	Spring—Fast Idle and Idle Stop Screws
78	7001619	7001619	7001619	7001619	Idle Stop Screw
79	7010352	7010352	7010352	7010352	Link—Secondary Lever
80	7005032	7005032	7005032	7005032	Clip—Secondary Link
81	7024966	7025923	7027775	7029713	Throttle Body Assembly
82	1353378	1353378	1353378	1353378	Flange Gasket
83	7009451	7009451	7009451	7009451	Screw Protecting Cap and Retainer Assembly

United Delco

Delco Rochester

MODEL 2GC CARBURETORS

1963 BUICK "SPECIAL" V-8

215 CU. IN. ENGINE

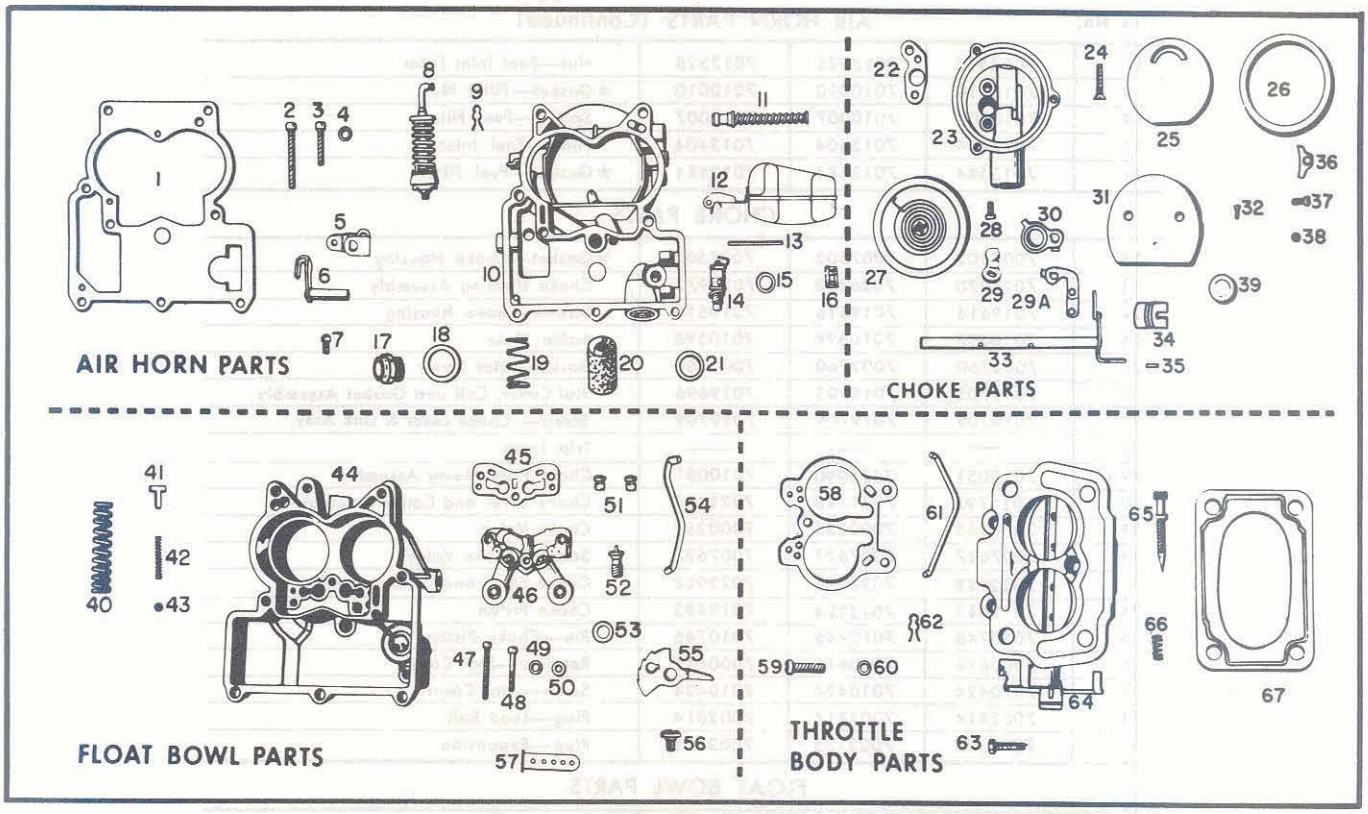

PARTS SHOWN ARE FOR IDENTIFICATION ONLY. CONSULT PARTS LIST FOR CORRECT PART NAME AND NUMBER

	EARLY AUTO. TRANS.	LATE AUTO. TRANS.	ALL SYNCHROMESH	APPLICATION
	7023046	**7023142**	**7023047**	**CARBURETOR No.**
	22-100C	**22-100C**	**22-101B**	**REPLACEMENT PACKAGE No.**
	7016256	7016256	7016256	OVERHAUL KIT
	TR-103	TR-103	TR-103	OK KIT (STEEL)
	VTR-103	VTR-103	VTR-103	OK KIT (NEO-tiP)
	40-275	40-275	40-275	GASKET SET
	7023190	7023190	7023190	CARB-AIRATOR
Illus. No.				AIR HORN PARTS
1	7021008	7021008	7021008	★Gasket—Air Horn
2	7010432	7010432	7010432	Screw—Air Horn—Long
3	7006119	7006119	7006119	Screw—Air Horn—Short
4	120217	120217	120217	Lockwasher—Air Horn Screws
5	7000266	7000266	7000266	Pump Lever—Inside
6	7017506	7017506	7017506	Pump Shaft and Lever Assembly
7	7010424	7010424	7010424	Screw—Pump Lever
8	7015871	7015871	7015871	★Pump Assembly
9	1875293	1875293	1875293	★Clip—Pump Plunger
10	7021974	7021974	7021974	Air Horn Assembly
11	7006323	7006323	7006323	Power Piston Assembly
12	7012974	7012974	7012974	Float Assembly
13	7002081	7002081	7002081	Pin—Float Hinge
14	7012524	7012524	7012524	★Needle and Seat Assembly
15	7019535	7019535	7019535	★Gasket—Needle Seat
16	7006079	7006079	7006079	★Strainer—Needle Seat

★ OVERHAUL KIT CONTENTS

	EARLY AUTO. TRANS. 7023046	LATE AUTO. TRANS. 7023142	ALL SYNCHROMESH 7023047	APPLICATION CARBURETOR No.
Illus. No.		AIR HORN PARTS (Continued)		
17	7013525	7013525	7013525	Nut—Fuel Inlet Filter
18	7010010	7010010	7010010	★Gasket—Filter Nut
19	7010007	7010007	7010007	Spring—Fuel Filter
20	7013404	7013404	7013404	Filter—Fuel Inlet
21	7013584	7013584	7013584	★Gasket—Fuel Filter
		CHOKE PARTS		
22	7007502	7007502	7007502	★Gasket—Choke Housing
23	7024970	7026693	7024973	Choke Housing Assembly
24	7019516	7019516	7019516	Screw—Choke Housing
25	7010598	7010598	7010598	Baffle Plate
26	7002760	7002760	7002760	★Gasket—Stat Cover
27	7019705	7019705	7019696	Stat Cover, Coil and Gasket Assembly
28	7019709	7019709	7019709	Screw— Choke Lever & Link Assy.
29	——	——	——	Trip Lever
29A	7010051	7022990	7010051	Choke Piston Lever Assembly
30	7021793	7021793	7021793	Choke Lever and Collar Assembly
31	7000255	7000255	7000255	Choke Valve
32	7007627	7007627	7007627	Screw—Choke Valve
33	7022988	7022988	7022988	Choke Shaft and Lever Assembly
34	7019483	7012294	7019483	Choke Piston
35	7010746	7010746	7010746	Pin—Choke Piston
36	7000614	7000614	7000614	Retainer—Stat Cover
37	7010424	7010424	7010424	Screw—Stat Cover
38	7002814	7002814	7002814	Plug—Lead Ball
39	7003135	7003135	7003135	Plug—Expansion
		FLOAT BOWL PARTS		
40	7002101	7002101	7002101	★Spring—Pump Return
41	7000286	7000286	7000286	★Guide—Pump Discharge
42	7002118	7002118	7002118	★Spring—Pump Discharge
43	7002117	7002117	7002117	★Ball—Pump Discharge
44	7021934	7026847	7021935	Float Bowl Assembly
45	7019911	7019911	7019911	★Gasket—Venturi Cluster
46	7025752	7026691	7025700	Venturi Cluster Assembly
47	7000293	7000293	7000293	Screw—Cluster—Outer
48	7000294	7000294	7000294	Screw—Cluster—Center
49	7000295	7000295	7000295	★Gasket—Center Screw
50	121841	121841	121841	Lockwasher—Outer Screws
51	7002946	7002947	7002948	Jet—Standard
51	7002945	7002946	7002947	Jet—Altitude
52	7006331	7006331	7006331	★Power Valve Assembly
53	7001613	7001613	7001613	★Gasket—Power Valve
54	7017519	7017519	7017519	Choke Rod
55	7017771	7026695	7017783	Fast Idle Cam
56	7019773	7019773	7019773	Screw—Cam Attaching
57	7021528	7021528	7021528	Insert—Main Well
		THROTTLE BODY PARTS		
58	7021933	7021933	7021933	★Gasket—Throttle Body
59	7015105	7015105	7015105	Screw—Throttle Body
60	121744	121744	121744	Lockwasher—Throttle Body Screws
61	7017518	7017518	7017518	Pump Rod
62	7005032	7005032	7005032	★Clip—Pump Rod
63	7006213	7006213	7006213	Idle Stop Screw
64	7020232	7020232	7025932	Throttle Body Assembly
65	7013116	7013116	7013116	★Idle Needle
66	7003190	7003190	7003190	Spring—Idle Needle
67	1195122	1195122	1195122	★Gasket—Flange

★ OVERHAUL KIT CONTENTS

United Delco

Delco Rochester

MODEL 2GC CARBURETORS

1963 BUICK LE SABRE V-8

401 CU. IN. ENGINE

FOR SPECIFICATIONS SEE BULLETIN 9 BU-1, FOR ADJUSTMENTS SEE BULLETIN 9 BU-3

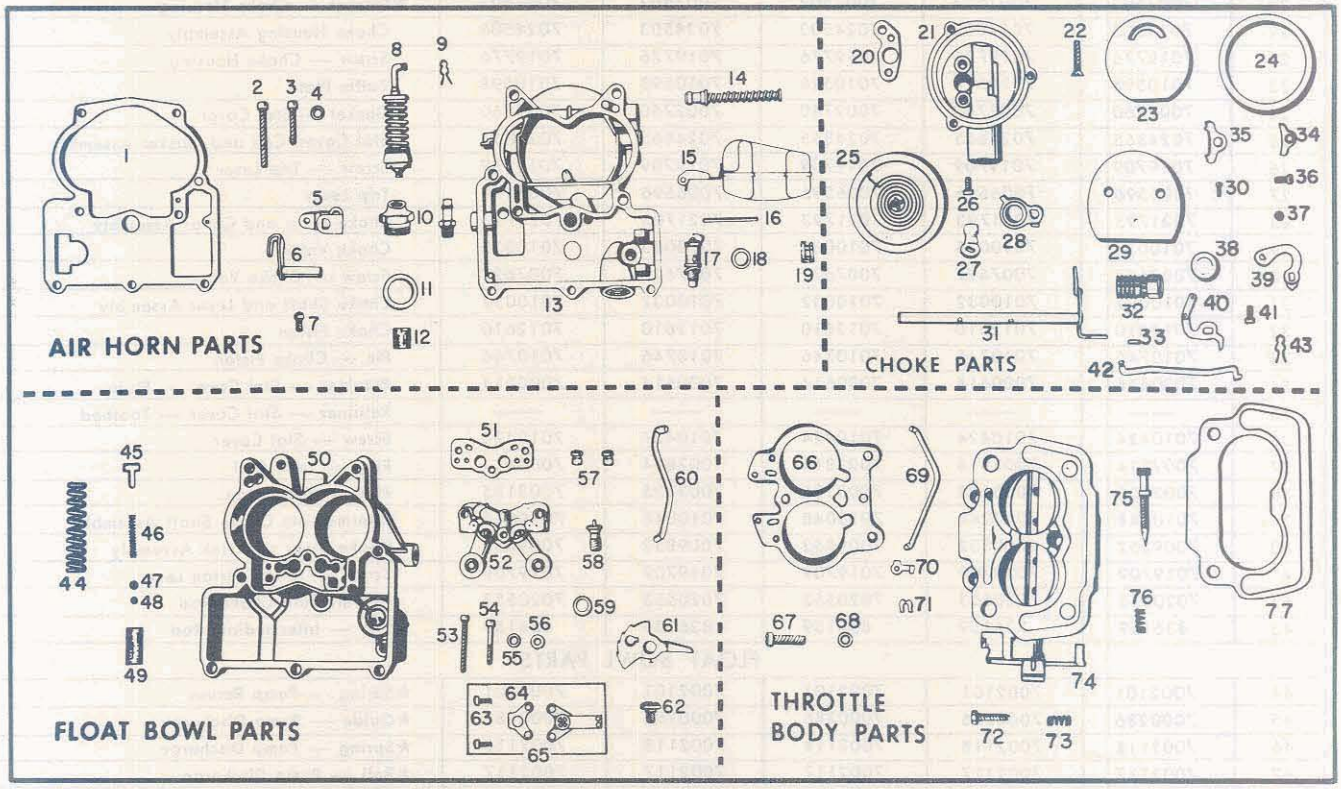

PARTS SHOWN ARE FOR IDENTIFICATION ONLY. CONSULT PARTS LIST FOR CORRECT PART NAME AND NUMBER

	1963	1963 Early	1963 Early	1963 Late	1963 Late	YEAR
	SYNCHROMESH ALL	AUTO. TRANS. STANDARD	AUTO. TRANS. AIR COND.	AUTO. TRANS. STANDARD	AUTO. TRANS. AIR COND.	APPLICATION
	7023041	**7023042**	**7023043**	**7023145**	**7023146**	**CARBURETOR No.**
	22-109	**22-106**	**22-106**	**22-106**	**22-106**	**REPLACEMENT PACKAGE No.**
	7016220	7016220	7016220	7016220	7016220	OVERHAUL KIT
	VTR-101	VTR-101	VTR-101	VTR-101	VTR-101	OK KIT
	40-268	40-268	40-268	40-268	40-268	GASKET SET
Illus. No.			AIR HORN PARTS			
1	7021007	7021007	7021007	7021007	7021007	★Gasket — Air Horn
2	7010432	7010432	7010432	7010432	7010432	Screw — Air Horn — Long
3	7006119	7006119	7006119	7006119	7006119	Screw — Air Horn — Short
4	120217	120217	120217	120217	120217	Lockwasher — Air Horn Screws
5	7000266	7000266	7000266	7000266	7000266	Pump Lever — Inside
6	7019511	7019511	7019511	7019511	7019511	Pump Shaft and Lever Assembly
7	7010424	7010424	7010424	7010424	7010424	Screw — Pump Lever
8	7016475	7016475	7016475	7016475	7016475	★Pump Assembly
9	1875293	1875293	1875293	1875293	1875293	★Clip — Pump Plunger
10	7019195	7019195	7019195	7019195	7019195	Strainer Nut — Fuel Inlet
11	7001597	7001597	7001597	7001597	7001597	★Gasket — Strainer Nut
12	7000261	7000261	7000261	7000261	7000261	★Strainer — Fuel Inlet
13	7021434	7021434	7021434	7021434	7021434	Air Horn Assembly
14	7006323	7006323	7006323	7006323	7006323	Power Piston Assembly
15	7012028	7012028	7012028	7012028	7012028	Float Assembly
16	7010037	7010037	7010037	7010037	7010037	Pin — Float Hinge
17	30-13	30-13	30-13	30-13	30-13	★Needle and Seat Assembly
18	7019535	7019535	7019535	7019535	7019535	★Gasket — Needle Seat
19	7006079	7006079	7006079	7006079	7006079	Strainer — Needle Seat

★ OVERHAUL KIT CONTENTS

CO, WD, 131, 132:16, 9X, 9FR, 9FD

	1963	1963 Early	1963 Early	1963 Late	1963 Late	YEAR
	SYNCHROMESH ALL	AUTO. TRANS. STANDARD	AUTO. TRANS. AIR COND.	AUTO. TRANS. STANDARD	AUTO. TRANS. AIR COND.	APPLICATION
	7023041	7023042	7023043	7023145	7023146	CARBURETOR No.
Illus. No.			CHOKE PARTS			
20	7007502	7007502	7007502	7007502	7007502	★Gasket — Choke Housing
21	7024503	7024503	7024503	7024503	7024503	Choke Housing Assembly
22	7019776	7019776	7019776	7019776	7019776	Screw — Choke Housing
23	7010598	7010598	7010598	7010598	7010598	Baffle Plate
24	7002760	7002760	7002760	7002760	7002760	★Gasket — Stat Cover
25	7024865	7024865	7024865	7024865	7024865	Stat Cover, Coil and Gasket Assembly
26	7019709	7019709	7019709	7019709	7019709	Screw — Trip Lever
27	7006596	7006596	7006596	7006596	7006596	Trip Lever
28	7021793	7021793	7021793	7021793	7021793	Choke Lever and Collar Assembly
29	7010035	7010035	7010035	7010035	7010035	Choke Valve
30	7007627	7007627	7007627	7007627	7007627	Screw — Choke Valve
31	7010032	7010032	7010032	7010032	7010032	Choke Shaft and Lever Assembly
32	7012610	7012610	7012610	7012610	7012610	Choke Piston
33	7010746	7010746	7010746	7010746	7010746	Pin — Choke Piston
34	7000614	7000614	7000614	7000614	7000614	Retainer — Stat Cover — Plain
35	——	——	——	——	——	Retainer — Stat Cover — Toothed
36	7010424	7010424	7010424	7010424	7010424	Screw — Stat Cover
37	7002814	7002814	7002814	7002814	7002814	Plug — Lead Ball
38	7003135	7003135	7003135	7003135	7003135	Plug — Expansion
39	7010048	7010048	7010048	7010048	7010048	Intermediate Choke Shaft Assembly
40	7009852	7009852	7009852	7009852	7009852	Choke Lever and Link Assembly
41	7019709	7019709	7019709	7019709	7019709	Screw — Choke Piston Lever
42	7020553	7020553	7020553	7020553	7020553	Intermediate Choke Rod
43	836159	836159	836159	836159	836159	★Clip — Intermediate Rod
			FLOAT BOWL PARTS			
44	7002101	7002101	7002101	7002101	7002101	★Spring — Pump Return
45	7000286	7000286	7000286	7000286	7000286	★Guide — Pump Discharge
46	7002118	7002118	7002118	7002118	7002118	★Spring — Pump Discharge
47	7002117	7002117	7002117	7002117	7002117	★Ball — Pump Discharge
48	7002120	7002120	7002120	7002120	7002120	★Ball — Pump Inlet Check
49	7004557	7004557	7004557	7004557	7004557	★Strainer — Pump Inlet
50	7026348	7021436	7021436	7026956	7026956	Float Bowl Assembly
51	7019533	7019533	7019533	7019533	7019533	★Gasket — Venturi Cluster
52	7025793	7025781	7024508	7025781	7026917	Venturi Cluster Assembly
53	7008502	7008502	7008502	7008502	7008502	Screw — Cluster — Outer
54	7009077	7009077	7009077	7009077	7009077	Screw — Cluster — Center
55	7008892	7008892	7008892	7008892	7008892	★Gasket — Center Screw
56	120217	120217	120217	120217	120217	Lockwasher — Outer Screws
57	7008662	7002659	7002660	7002658	7002658	Jet — Standard (All)
57	7008660	7002658	7002658	7002656	7002656	Jet — Altitude (All)
58	7011989	7011989	7011989	7011989	7011989	★Power Valve Assembly
59	7011990	7011990	7011990	7011990	7011990	★Gasket — Power Valve
60	7010055	7010055	7010055	7010055	7010055	Choke Rod
61	7020541	7020541	7020541	7020541	7020541	Cam — Fast Idle
62	7019773	7019773	7019773	7019773	7019773	Screw — Cam Attaching
63	7015127	——	7015127	——	7015127	Screw — Idle Compensator
64	7013341	——	7013341	——	7013341	★Gasket — Idle Compensator
65	7021523	——	7021523	——	7021523	Idle Compensator Kit
			THROTTLE BODY PARTS			
66	7015106	7015106	7015106	7015106	7015106	★Gasket — Throttle Body
67	7015105	7015105	7015105	7015105	7015105	Screw — Throttle Body
68	121744	121744	121744	121744	121744	Lockwasher — Throttle Body
69	7021440	7021440	7021440	7021440	7021440	Pump Rod
70	7003137	7003137	7003137	7003137	7003137	★Clip — Pump Rod — Upper
71	7005032	7005032	7005032	7005032	7005032	★Clip — Pump Rod — Lower
72	7006213	7006213	7006213	7006213	7006213	Fast Idle Screw
73	7001690	7001690	7001690	7001690	7001690	Spring — Fast Idle Screw
74	7021437	7025661	7025661	7025661	7025661	Throttle Body Assembly
75	7013116	7013116	7013116	7013116	7013116	★Idle Needle
76	7011479	7011479	7011479	7011479	7011479	Spring — Idle Needles
77	1351368	1351368	1351368	1351368	1351368	★Gasket — Flange

★ OVERHAUL KIT CONTENTS

United Delco

Delco Rochester

MODEL BC CARBURETORS

1964-65 BUICK "V-6"

225 CUBIC INCH ENGINE

BULLETIN 9C-113
DATE: NOVEMBER, 1964
PAGE 1
REPLACES: 9C-113,
DATED: OCT., 1963

FOR SPECIFICATIONS SEE BULLETIN 9 BU-1, FOR ADJUSTMENTS SEE BULLETIN 9 BU-2

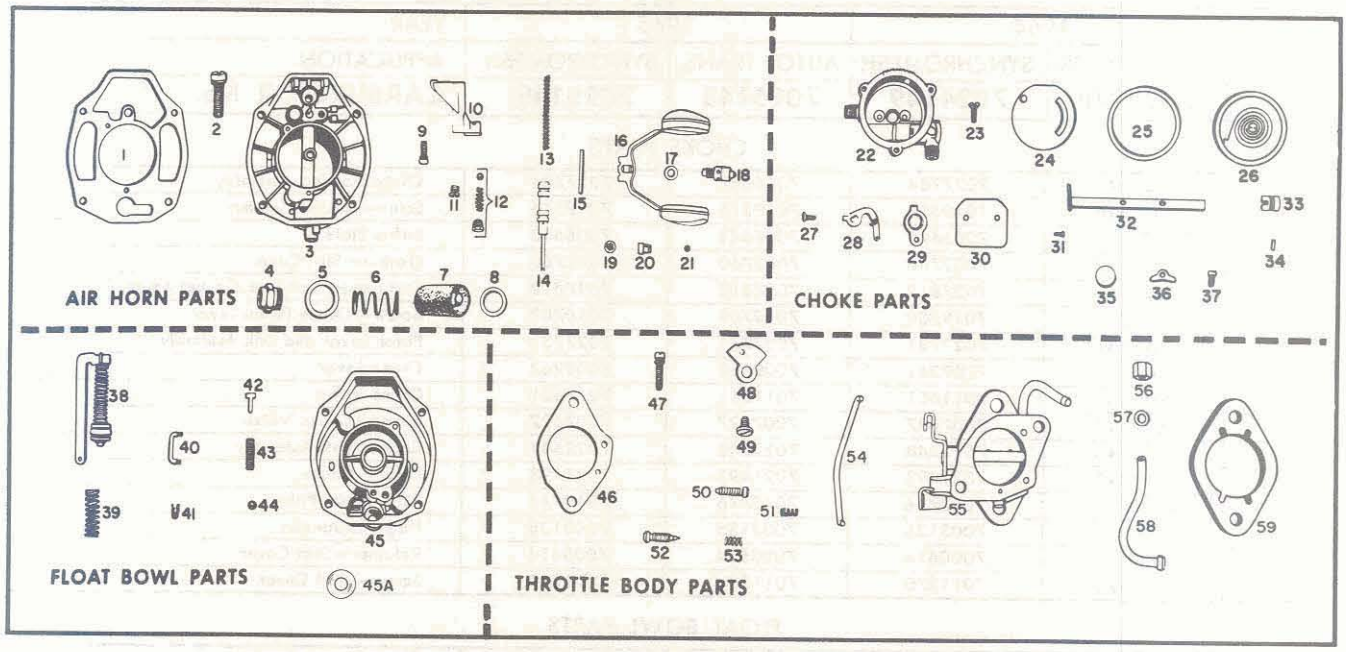

PARTS SHOWN ARE FOR IDENTIFICATION ONLY. CONSULT PARTS LIST FOR CORRECT PART NAME AND NUMBER

	1964		1965		YEAR
	AUTO. TRANS.	SYNCHROMESH	AUTO. TRANS.	SYNCHROMESH	APPLICATION
	7024148	**7024149**	**7025148**	**7025149**	**CARBURETOR No.**
	21-100	**21-101**	**21-102**	**21-103**	**REPLACEMENT PACKAGE No.**
	7016447	7016448	7016447	7016448	OVERHAUL KIT
	VSR-101	VSR-101	VSR-101	VSR-101	OK KIT
	40-296	40-296	40-296	40-296	GASKET SET
	7028581	7028581	7028581	7028581	CARB-AIRATOR
Illus. No.	AIR HORN PARTS				
1	7026584	7026584	7026584	7026584	Gasket—Air Horn
2	7026595	7026595	7026595	7026595	Screw—Air Horn Attaching
3	7027810	7027811	7029731	7031401	Air Horn Assembly
4	7013525	7013525	7013525	7013525	Filter Nut—Fuel Inlet
5	7010010	7010010	7010010	7010010	Gasket—Filter Nut
6	7010007	7010007	7010007	7010007	Spring—Fuel Filter
7	7013404	7013404	7013404	7013404	Filter—Fuel Inlet
8	7013584	7013584	7013584	7013584	Gasket—Fuel Filter
9	7000745	7000745	7000745	7000745	Screw—Main Well Support
10	7026619	7026619	7026619	7031000	Main Well Support Assembly
11	7002961	7002961	7002961	7002961	Main Metering Jet (Standard)
11	7002960	7002960	7002960	7002960	Main Metering Jet (Altitude)
12	7026961	7026961	7026961	7026961	Power Valve Assembly
13	7002366	7002366	7002071	7002366	Spring—Power Piston
14	7010002	7010002	7010002	7010002	Piston—Power
15	7002081	7002081	7002081	7002081	Pin—Float Hinge
16	7002672	7002672	7002672	7002672	Float Assembly
17	7025735	7025735	7025735	7025735	Gasket—Needle Seat
18	30-1	30-1	30-1	30-1	Needle and Seat Assembly
19	7001637	7001637	7001637	7001637	Plug—Lead Ball—Idle Passage—Outer
20	7002055	7002055	7002055	7002055	Plug—Idle Passage—Inner
21	7002814	7002814	7002814	7002814	Plug—Lead Ball

	1964		1965		YEAR
	AUTO. TRANS.	SYNCHROMESH	AUTO. TRANS.	SYNCHROMESH	APPLICATION
	7024148	**7024149**	**7025148**	**7025149**	**CARBURETOR No.**
Illus. No.			CHOKE PARTS		
22	7026647	7027784	7026647	7027784	Choke Housing Assembly
23	7019516	7019516	7019516	7019516	Screw—Choke Housing
24	7006643	7006643	7006643	7006643	Baffle Plate
25	7002760	7002760	7002760	7002760	Gasket—Stat Cover
26	7027812	7027812	7027812	7027812	Stat Cover, Coil and Gasket Assembly
27	7019709	7019709	7019709	7019709	Screw—Choke Piston Lever
28	7027731	7027731	7027731	7027731	Piston Lever and Link Assembly
29	7009262	7009262	7009262	7009262	Choke Lever
30	7011651	7011651	7011651	7011651	Choke Valve
31	7007627	7007627	7007627	7007627	Screw—Choke Valve
32	7022548	7022548	7022548	7022548	Choke Shaft Assembly
33	7021493	7021493	7021493	7021493	Piston—Choke
34	7010746	7010746	7010746	7010746	Pin—Choke Piston
35	7003135	7003135	7003135	7003135	Plug—Expansion
36	7000614	7000614	7000614	7000614	Retainer—Stat Cover
37	7011270	7011270	7011270	7011270	Screw—Stat Cover
			FLOAT BOWL PARTS		
38	7028767	7027806	7028767	7027806	Pump Plunger Assembly
39	7005954	7005954	7005954	7005954	Spring—Pump Return
40	7029787	7029787	7029787	7029787	Link—Pump
41	836159	836159	836159	836159	Pin Spring—Pump Link
42	7003838	7003838	7003838	7003838	Guide—Pump Discharge
43	7002118	7002118	7002118	7002118	Spring—Pump Discharge
44	7002117	7002117	7002117	7002117	Ball—Pump Discharge
45	7027813	7027814	7027813	7027814	Float Bowl Assembly
45A	7026716	7026716	7026716	7026716	"O" Ring—Vacuum Channel Tube
			THROTTLE BODY PARTS		
46	7025560	7025560	7025560	7025560	Gasket—Throttle Body
47	7015365	7015365	7015365	7015365	Screw—Throttle Body
48	7026594	7026617	7029554	7029502	Cam—Fast Idle
49	7003561	7003561	7003561	7003561	Screw—Cam Attaching
50	7011546	7011546	7029427	7029427	Screw—Fast Idle
51	7001690	7001690	7029428	7029428	Spring Fast Idle Screw
52	7002357	7002357	7002357	7002357	Needle—Idle Adjusting
53	7001666	7001666	7001666	7001666	Spring—Idle Needle
54	7028896	7028896	7028896	7028896	Choke Rod
55	7027815	7027815	7029714	7029714	Throttle Body Assembly
56	7012002	7012002	7012002	7012002	Nut—Choke Suction Tube
57	7002883	7002883	7002883	7002883	Packing—Choke Suction Tube
58	7020421	7020421	7020421	7020421	Choke Suction Tube Assembly
59	3828267	3828267	3828267	3828267	Flange Gasket

7024099	IDLE SPEED-UP CONTROL ASSEMBLY (Air Conditioned Cars)

United Delco

Delco Rochester

MODEL 4GC CARBURETORS

1964 BUICK "V-8"

300 CUBIC INCH ENGINE

FOR SPECIFICATIONS SEE BULLETIN 9 BU-1, FOR ADJUSTMENTS SEE BULLETIN 9 BU-4

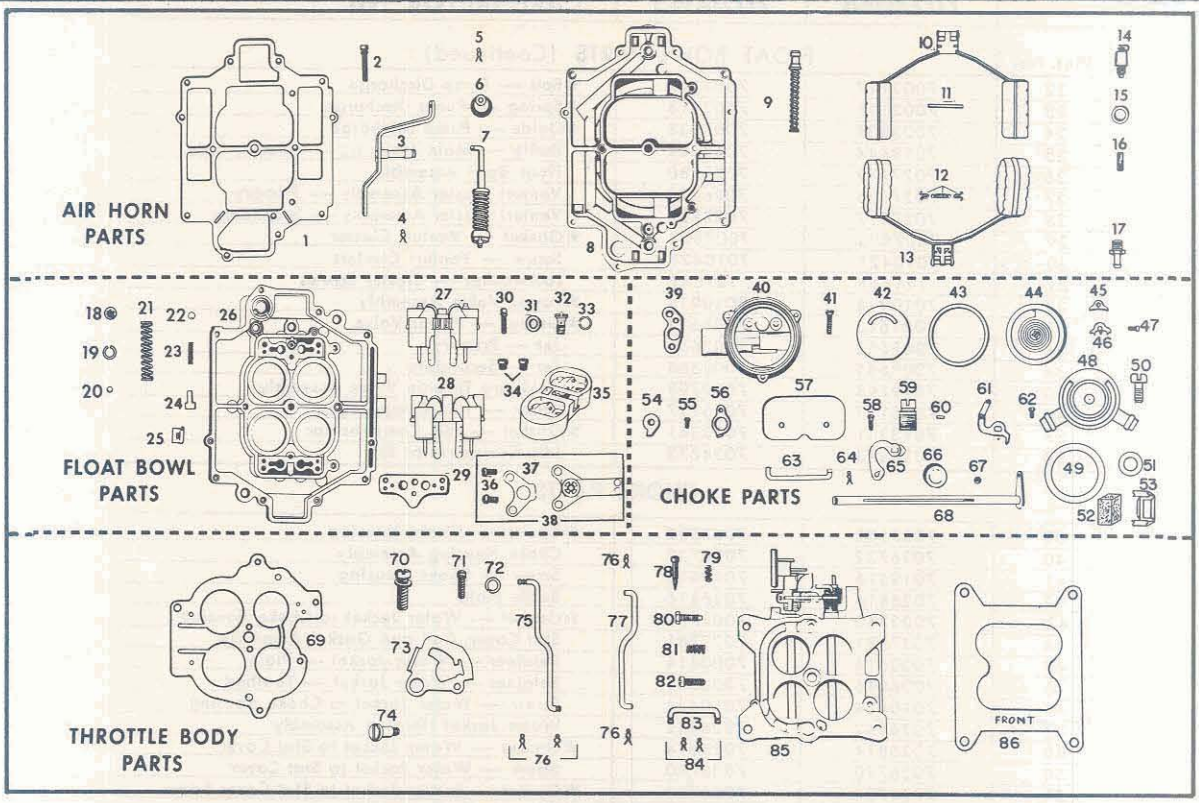

PARTS SHOWN ARE FOR IDENTIFICATION ONLY. CONSULT PARTS LIST FOR CORRECT PART NAME AND NUMBER

	DYNAFLOW	SYNCHROMESH	APPLICATION
	7024044	**7024045**	**CARBURETOR No.**
	24-109	**24-110**	**REPLACEMENT PACKAGE No.**
	7016443	7016443	OVERHAUL KIT
	VFR-106	VFR-106	OK KIT
	40-294	40-294	GASKET SET
	7028627	7028646	ALTITUDE KIT
Illus. No.		AIR HORN PARTS	
1	7025649	7025649	★Gasket — Air Horn
2	7000249	7000249	Screw — Air Horn
3	7021968	7021968	Pump Shaft and Lever Assembly
4	7017735	7017735	★Clip — Pump Lever
5	1875293	1875293	★Clip — Pump Plunger
6	7006372	7006372	★Boot — Pump Plunger
7	7020246	7020246	★Pump Assembly
8	7027772	7021431	Air Horn Assembly
9	7025738	7025738	Power Piston Assembly
10	7016674	7016674	Float Assembly — Primary
11	7001595	7001595	Pin — Float Hinge
12	7001850	7001850	★Float Balance Spring and Clips
13	7012148	7012148	Float Assembly — Secondary
14	30-11	30-11	★Needle and Seat Assembly (Primary)
14	30-7	30-7	★Needle and Seat Assembly (Secondary)
15	7019535	7019535	★Gasket — Needle Seats
16	7006079	7006079	Strainer — Needle Seats
17	5620839	5620839	Fitting — Fuel Inlet
		FLOAT BOWL PARTS	
18	7001604	7001604	★Screen — Pump Inlet
19	7001605	7001605	★Retainer — Pump Inlet Screen
20	7002120	7002120	★Ball — Pump Inlet Check
21	7008694	7008694	★Spring — Pump Return

★ OVERHAUL KIT CONTENTS

Illus. No.	DYNAFLOW 7024044	SYNCHROMESH 7024045	APPLICATION CARBURETOR No.
			FLOAT BOWL PARTS (Continued)
22	7002117	7002117	★Ball — Pump Discharge
23	7002118	7002118	★Spring — Pump Discharge
24	7003838	7003838	★Guide — Pump Discharge
25	7019644	7019644	Baffle — Main Metering — Primary Side
26	7027779	7027780	Float Bowl Assembly
27	7027826	7026723	Venturi Cluster Assembly — Primary
28	7027827	7027827	Venturi Cluster Assembly — Secondary
29	7007803	7007803	★Gasket — Venturi Cluster
30	7010421	7010421	Screw — Venturi Clusters
31	121841	121841	Lockwasher — Cluster Screws
32	7010918	7010918	★Power Valve Assembly
33	7001613	7001613	★Gasket — Power Valve
34	7002652	7002654	Jet — Primary
34	7008665	7008665	Jet — Secondary
35	7019798	7019798	Auxiliary Throttle Valve Assembly
36	7015127	7015127	Screw — Idle Compensator
37	7013341	7013341	★Gasket — Idle Compensator
38	7024873	7024873	Idle Compensator Kit
			CHOKE PARTS
39	7007502	7007502	★Gasket — Choke Housing
40	7026732	7026732	Choke Housing Assembly
41	7019516	7019516	Screw — Choke Housing
42	7026816	7026816	Baffle Plate
43	7002760	7002760	★Gasket — Water Jacket to Choke Housing
44	7027781	7027781	Stat Cover, Coil and Gasket Assembly
45	7000614	7000614	Retainer — Water Jacket — Plain
46	7006846	7006846	Retainer — Water Jacket — Toothed
47	7010424	7010424	Screw — Water Jacket to Choke Housing
48	7026852	7026852	Water Jacket Housing Assembly
49	7026814	7026814	★Gasket — Water Jacket to Stat Cover
50	7026780	7026780	Screw — Water Jacket to Stat Cover
51	7026734	7026734	★Gasket — Water Jacket to Stat Cover Screw
52	7026817	7026817	Filter — Choke Housing
53	7026818	7026818	Retainer — Filter
54	7019594	7019594	Trip Lever
55	7019709	7019709	Screw — Trip Lever
56	7027897	7027897	Choke Lever and Collar Assembly
57	7000191	7000191	Choke Valve
58	7007627	7007627	Screw — Choke Valve
59	7012610	7012610	Choke Piston
60	7010746	7010746	Pin — Choke Piston
61	7009852	7009852	Choke Piston Lever and Link Assembly
62	7019709	7019709	Screw — Choke Piston Lever
63	7025757	7025757	Intermediate Choke Rod
64	836159	836159	★Clip — Intermediate Choke Rod
65	7010048	7010048	Intermediate Choke Shaft Assembly
66	7003135	7003135	Plug — Expansion
67	7002814	7002814	Plug — Lead Ball
68	7010362	7010362	Choke Shaft and Lever Assembly
			THROTTLE BODY PARTS
69	7026738	7026738	★Gasket — Throttle Body
70	7004324	7004324	Screw — Throttle Body — Large
71	7015105	7015105	Screw — Throttle Body — Small
72	121744	121744	Lockwasher — Small Screws
73	7026748	7026749	Cam — Fast Idle
74	7019773	7019773	Screw — Cam Attaching
75	7026831	7026831	Choke Rod
76	1875293	1875293	★Clip — Pump Rod and Choke Rod
77	7021941	7021941	Pump Rod
78	7013470	7013470	★Idle Needle
79	7011479	7011479	Spring — Idle Needle
80	7011546	7011546	Screw — Fast Idle Adjusting
81	7001690	7001690	Spring — Fast Idle and Idle Stop Screws
82	7001619	7001619	Idle Stop Screw
83	7010352	7010352	Link — Secondary Lever
84	1875293	1875293	★Clip — Secondary Lever Link
85	7027782	7027792	Throttle Body Assembly
86	1364416	1364416	★Flange Gasket

★ OVERHAUL KIT CONTENTS

United Delco

Delco Rochester

MODEL 2GC CARBURETORS
1964-65 BUICK "V-8"
300 CUBIC INCH ENGINE

BULLETIN 9C-115
DATE: NOVEMBER, 1964
PAGE 1
REPLACES: 9C-115,
DATED: OCT., 1963

FOR SPECIFICATIONS SEE BULLETIN 9 BU-1, FOR ADJUSTMENTS SEE BULLETIN 9 BU-3

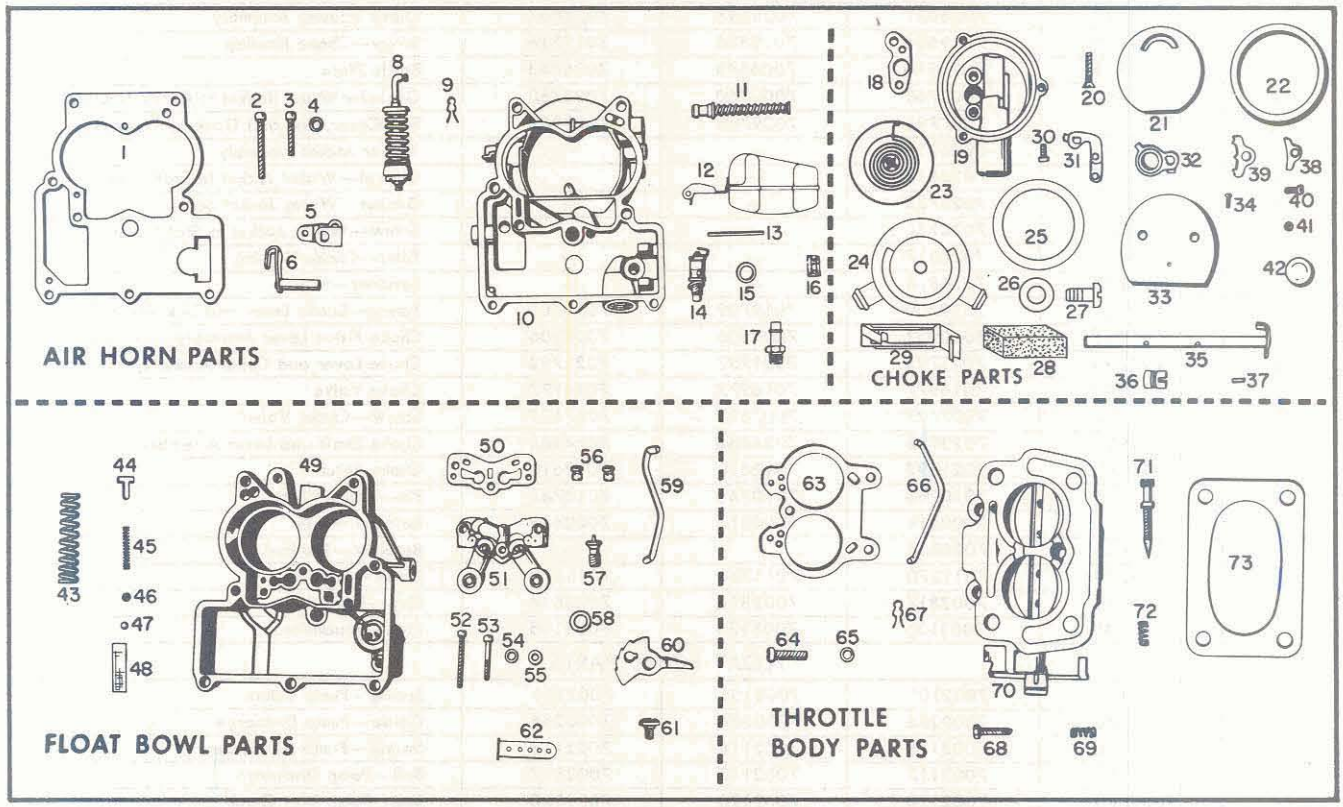

PARTS SHOWN ARE FOR IDENTIFICATION ONLY. CONSULT PARTS LIST FOR CORRECT PART NAME AND NUMBER

	1964		1965		YEAR
	AUTO. TRANS.	SYNCHROMESH	AUTO. TRANS.	SYNCHROMESH	APPLICATION
	7024046	**7024047**	**7025046**	**7025047**	**CARBURETOR No.**
	22-110	**22-111**	**22-112**	**22-113**	**REPLACEMENT PACKAGE No.**
	7016445	7016445	7016531	7016531	OVERHAUL KIT
	VTR-104	VTR-104	VTR-105	VTR-105	OK KIT
	40-295	40-295	40-307	40-307	GASKET SET
	7028581	7028581	7028581	7028581	CARB-AIRATOR
Illus. No.	AIR HORN PARTS				
1	7021008	7021008	7021008	7021008	Gasket—Air Horn
2	7010432	7010432	7010432	7010432	Screw—Air Horn—Long
3	7006119	7006119	7006119	7006119	Screw—Air Horn—Short
4	120217	120217	120217	120217	Lockwasher—Air Horn Screws
5	7000266	7000266	7000266	7000266	Pump Lever—Inside
6	7017506	7017506	7017506	7017506	Pump Shaft and Lever Assembly
7	7011270	7011270	7011270	7011270	Screw—Pump Lever
8	7015871	7015871	7015871	7015871	Pump Assembly
9	1875293	1875293	1875293	1875293	Clip—Pump Plunger
10	7027841	7027841	7029707	7029707	Air Horn Assembly
11	7009718	7009718	7006323	7006323	Power Piston Assembly
12	7012028	7012028	7012028	7012028	Float Assembly
13	7002081	7002081	7002081	7002081	Pin—Float Hinge
14	30-9	30-9	30-13	30-13	Needle and Seat Assembly
15	7019535	7019535	7019535	7019535	Gasket—Needle Seat
16	7006079	7006079	7006079	7006079	Strainer—Needle Seat
—	7006474	7006474	7006474	7006474	Pull Clip—Float Needle
17	5620839	5620839	5620839	5620839	Fitting—Fuel Inlet

	1964		1965		YEAR
	AUTO. TRANS.	SYNCHROMESH	AUTO. TRANS.	SYNCHROMESH	APPLICATION
	7024046	**7024047**	**7025046**	**7025047**	**CARBURETOR No.**
Illus. No.			CHOKE PARTS		
18	7007502	7007502	7007502	7007502	Gasket—Choke Housing
19	7026623	7026623	7028837	7028837	Choke Housing Assembly
20	7019516	7019516	7019516	7019516	Screw—Choke Housing
21	7026816	7026816	7006643	7006643	Baffle Plate
22	7002760	7002760	7002760	7002760	Gasket—Water Jacket to Choke Housing
23	7027793	7027794	7029708	7029709	Stat Cover, Coil and Gasket Assembly
24	7026852	7026852	—	—	Water Jacket Assembly
25	7026814	7026814	—	—	Gasket—Water Jacket to Stat Cover
26	7026734	7026734	—	—	Gasket—Water Jacket Screw
27	7026780	7026780	—	—	Screw—Water Jacket to Stat Cover
28	7026817	7026817	—	—	Filter—Choke Housing
29	7026818	7026818	—	—	Retainer—Filter
30	7019709	7019709	7019709	7019709	Screw—Choke Lever and Link Assembly
31	7010051	7010051	7007506	7007506	Choke Piston Lever Assembly
32	7021793	7021793	7021793	7021793	Choke Lever and Collar Assembly
33	7016977	7016977	7016977	7016977	Choke Valve
34	7007627	7007627	7007627	7007627	Screw—Choke Valve
35	7022988	7022988	7024464	7024464	Choke Shaft and Lever Assembly
36	7021493	7021493	7012610	7012610	Choke Piston
37	7010746	7010746	7010746	7010746	Pin—Choke Piston
38	7000614	7000614	7000614	7000614	Retainer—Plain
39	7006846	7006846	—	—	Retainer—Toothed
40	7011270	7011270	7011270	7011270	Screw—Retainer
41	7002814	7002814	7002814	7002814	Plug—Lead Ball
42	7003135	7003135	7003135	7003135	Plug—Expansion
			FLOAT BOWL PARTS		
43	7002101	7002101	7002101	7002101	Spring—Pump Return
44	7000286	7000286	7000286	7000286	Guide—Pump Discharge
45	7002118	7002118	7002118	7002118	Spring—Pump Discharge
46	7002117	7002117	7002117	7002117	Ball—Pump Discharge
47	7002120	7002120	7002120	7002120	Ball—Pump Inlet Check
48	7004557	7004557	7004557	7004557	Strainer—Pump Inlet
49	7027795	7027796	7029710	7029711	Float Bowl Assembly
50	7019911	7019911	7019911	7019911	Gasket—Venturi Cluster
51	7026545	7026786	7028844	7028845	Venturi Cluster Assembly
52	7000293	7000293	7000293	7000293	Screw—Cluster—Outer
53	7000294	7000294	7000294	7000294	Screw—Cluster—Center
54	7000295	7000295	7000295	7000295	Gasket—Center Screw
55	121841	121841	121841	121841	Lockwasher—Outer Screws
56	7002953	7002954	7002652	7002655	Jet—Standard
56	7002951	7002952	7002649	7002653	Jet—Altitude
57	7006331	7006331	7010918	7010918	Power Valve Assembly
58	7001613	7001613	7001613	7001613	Gasket—Power Valve
59	7017519	7017519	7021459	7021459	Choke Rod
60	7017771	7026571	7028970	7029401	Fast Idle Cam
61	7019773	7019773	7019773	7019773	Screw—Cam Attaching
62	7021528	7021528	7021528	7021528	Insert—Main Well
			THROTTLE BODY PARTS		
63	7026544	7026544	7013680	7013680	Gasket—Throttle Body
64	7015105	7015105	7015105	7015105	Screw—Throttle Body
65	121744	121744	121744	121744	Lockwasher—Throttle Body Screws
66	7017518	7017518	7029978	7029978	Pump Rod
67	1875293	1875293	1875293	1875293	Clip—Pump Rod
68	7011546	7011546	7029427	7029427	Fast Idle Screw
69	7001690	7001690	7029428	7029428	Spring—Fast Idle Screw
70	7026537	7026698	7028846	7028847	Throttle Body Assembly
71	7013116	7013116	7013470	7013470	Idle Needle
72	7011479	7011479	7011479	7011479	Spring—Idle Needle
73	1364417	1364417	1367161	1367161	Gasket—Flange

United Delco

Delco Rochester

MODEL 4GC CARBURETORS

1965 BUICK V-8

425 CU. IN. ENGINE

FOR SPECIFICATIONS SEE BULLETIN 9 BU-1, FOR ADJUSTMENTS SEE BULLETIN 9 BU-4

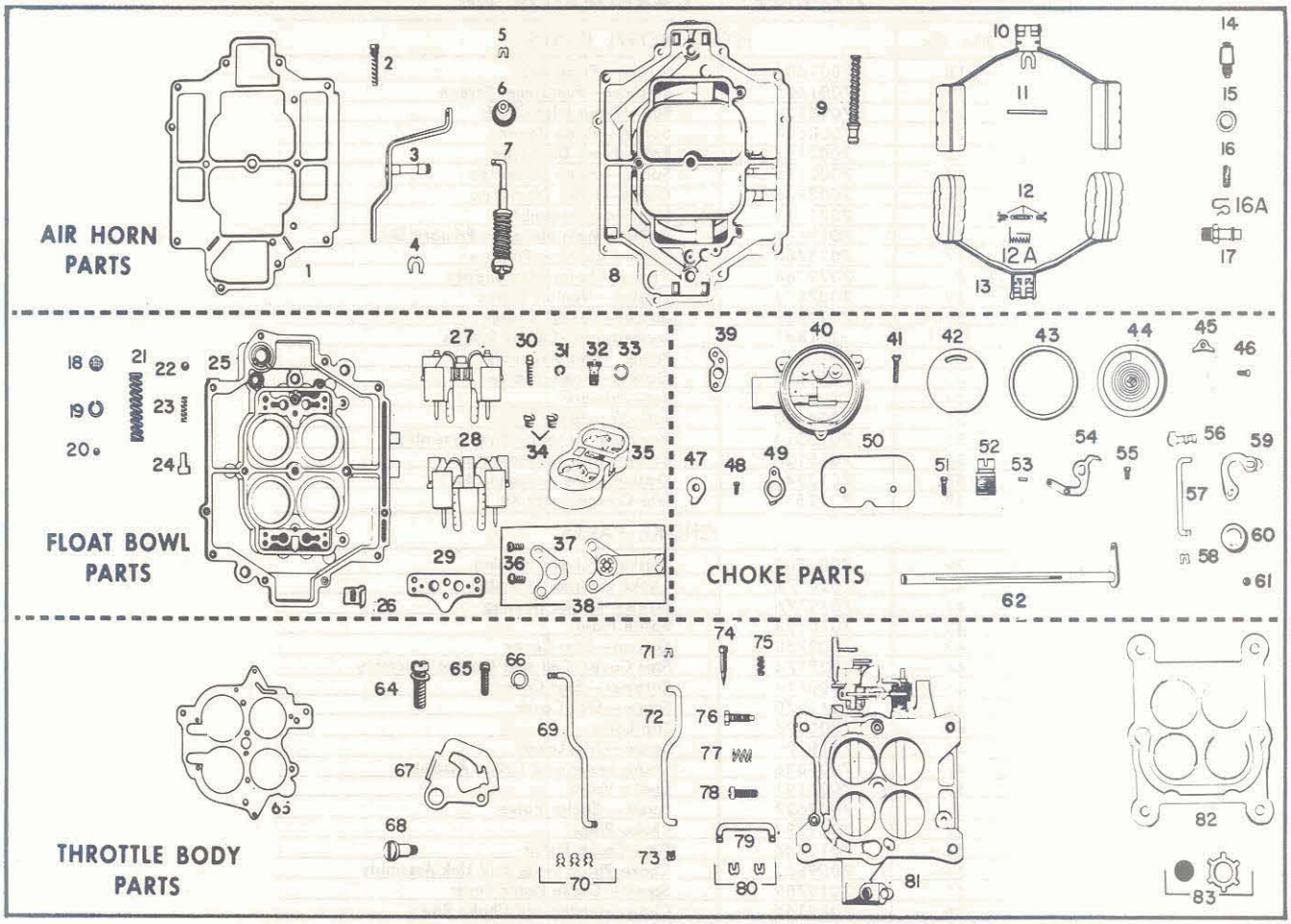

PARTS SHOWN ARE FOR IDENTIFICATION ONLY. CONSULT PARTS LIST FOR CORRECT PART NAME AND NUMBER

	7025042	**CARBURETOR No.**
	24-112	**REPLACEMENT PACKAGE No.**
	7016530	OVERHAUL KIT
	VFR-107	OK KIT
	40-306	GASKET SET
	7028656	ALTITUDE KIT
Illus. No.	AIR HORN PARTS	
1	7028964	Gasket—Air Horn
2	7000249	Screw—Air Horn
3	7013143	Pump Shaft and Lever Assembly
4	7007616	Clip—Pump Lever
5	7005032	Clip—Pump Plunger
6	7006372	Boot—Pump Plunger
7	7012417	Pump Assembly
8	7029706	Air Horn Assembly
9	7025738	Power Piston Assembly
10	7028875	Float Assembly—Primary
11	7001595	Pin—Float Hinge
12	7028873	Torsion Spring
13	7028875	Float Assembly—Secondary
14	30-11	Needle and Seat Assembly—Primary
14	30-7	Needle and Seat Assembly—Secondary
15	7019535	Gasket—Needle Seats
16	7006079	Strainer—Needle Seats
16A	7006474	Pull Clip—Float Needle
17	5620839	Fitting—Fuel Inlet

	7025042	CARBURETOR No.
Illus. No.	FLOAT BOWL PARTS	
18	7001604	Screen—Pump Inlet
19	7001605	Retainer—Pump Inlet Screen
20	7002120	Ball—Pump Inlet Check
21	7008694	Spring—Pump Return
22	7002117	Ball—Pump Discharge
23	7002118	Spring—Pump Discharge
24	7003838	Guide—Pump Discharge
25	7031413	Float Bowl Assembly
26	7019644	Baffle—Main Metering-Primary Side
27	7025780	Venturi Cluster—Primary
28	7029788	Venturi Cluster—Secondary
29	7007803	Gasket—Venturi Cluster
30	7010421	Screw—Venturi Cluster
31	121841	Lockwasher—Cluster Screws
32	7010918	Power Valve Assembly
33	7001613	Gasket—Power Valve
34	7002652	Jet—Primary
35	7008680	Jet—Secondary
35	7013313	Auxiliary Throttle Valve Assembly
36	7015127	Screw—Idle Compensator
37	7013341	Gasket—Idle Compensator
38	7022572	Idle Compensator Kit
	CHOKE PARTS	
39	7007502	Gasket—Choke Housing
40	7026972	Choke Housing Assembly
41	7019776	Screw—Choke Housing
42	7010598	Baffle Plate
43	7002760	Gasket—Stat Cover
44	7027774	Stat Cover, Coil and Gasket Assembly
45	7000614	Retainer—Stat Cover
46	7011270	Screw—Stat Cover
47	7000196	Trip Lever
48	7019709	Screw—Trip Lever
49	7009626	Choke Lever and Collar Assembly
50	7000191	Choke Valve
51	7007627	Screw—Choke Valve
52	7012294	Choke Piston
53	7010746	Pin—Choke Piston
54	7009852	Choke Piston Lever and Link Assembly
55	7019709	Screw—Choke Piston Lever
56	7005165	Clip—Intermediate Choke Rod
57	7010389	Intermediate Choke Rod
58	7005109	Clip—Intermediate Choke Rod
59	7010048	Intermediate Choke Shaft Assembly
60	7003135	Plug Expansion
61	7002814	Plug—Lead Ball
62	7010362	Choke Shaft and Lever Assembly
	THROTTLE BODY PARTS	
63	7013471	Gasket—Throttle Body
64	7004324	Screw—Throttle Body—Large
65	7015105	Screw—Throttle Body—Small
66	121744	Lockwasher—Small Screws
67	7029553	Cam—Fast Idle
68	7003561	Screw—Cam Attaching
69	7019276	Choke Rod
70	836159	Clip—Choke Rod
71	7005032	Clip—Pump Rod
72	7013140	Pump Rod
73	7005032	Clip—Pump Rod
74	7013470	Idle Needle
75	7011479	Spring—Idle Needle
76	7029427	Screw—Fast Idle
77	7029428	Spring—Fast Idle and Idle Stop Screws
78	7001619	Idle Stop Screw
79	7010352	Link—Secondary Lever
80	7005032	Clip—Secondary Link
81	7031414	Throttle Body Assembly
82	1353378	Flange Gasket
83	7009451	Screw Protecting Cap and Retainer Assembly